

STREETFIGHTER S

Spare parts catalogue part number: 915.1.290.1B

GENERAL INFORMATION

The present spare parts order exactly the right spare parts

When ordering specify:

1) the part's code number followed by its description; quantity needed;

2) the motorcycle's serial number, stamped on the steering head.

Reference to right and left apply to the vehicle in terms of its direction of move-ment.

Spare parts drawings are general and do not represent the part.

The contents of this catalogue are general and can undergo changes without prior notice.

VALIDITY

f.m.	Until V.I.N.
d.m.	From V.I.N.
f.m.m.	Up to engine number
d.m.m.	From engine number

LIST

CAL	California
CDN	Canada

Ducati Motor Holding S.p.A.
Commercial and Administation Office:
Via A. Cavalieri Ducati n. 3
40132 Bologna, Italy
Telefono 051 6413111
Fax 051 406580
Internet www.ducati.com

CATALOGUE No: 915.1.290.1B
ISSUED: 04 - 09

CATALOGUE No: 915.1.290.1B
ISSUED: 04 - 09



Paint	Code
"Rosso Anniversary DUCATI"	(PPG) 473.101
"Midnight Black"	(PAL) 928D413
"Trasparente"	(PPG) 228.880
"Trasparente"	(PAL) 923I0652

CATALOGUE No: 915.1.290.1B
ISSUED: 04 - 09

page Contents

4	001	Workshop service tools
6	001a	Workshop service tools
8	001b	Workshop service tools
10	001c	Dds tester
12	001d	Workshop service tools
14	002	Gearchange control
16	003	Gearbox
18	004	Clutch
20	005	Clutch-side crankcase cover
22	006	Connecting rods
24	007	Cylinders - pistons
26	008	Timing system
28	009	Filters and oil pump
30	010	Crankcase halves
32	010a	Crankcase halves
34	011	Water pump-altr-side crnkcse cover
36	012	Electric starting and ignition
38	013	Cylinder head : timing system
40	014	Vertical cylinder head
42	015	Horizontal cylinder head
44	016	Heat exchanger
46	017	Throttle body
48	018	Battery support
50	018a	Electrical system
52	019	Exhaust system
54	020	Headlight & instr. panel
56	021	Handlebar and controls
58	021a	Front forks
60	022	Frame
62	022a	Stand
64	023	Clutch control
66	024	Front brake
68	025	Rear brake
70	026	Front and rear wheels
72	026a	Rear wheel axle
74	027	Rear subframe
76	027a	Number plate holder
78	028	Rear suspension
80	028a	Swingarm
82	029	Air intake - oil breather
84	030	Radiator
86	031	Cooling system
88	032	Fuel tank
90	032a	Fuel system
92	033	Seat
94	034	Half fairing
96	035	Evaporative emissions canister
98	036	Data plate positions

CATALOGUE No: 915.1.290.1B
ISSUED: 04 - 09

DRAWING 001 Workshop service tools

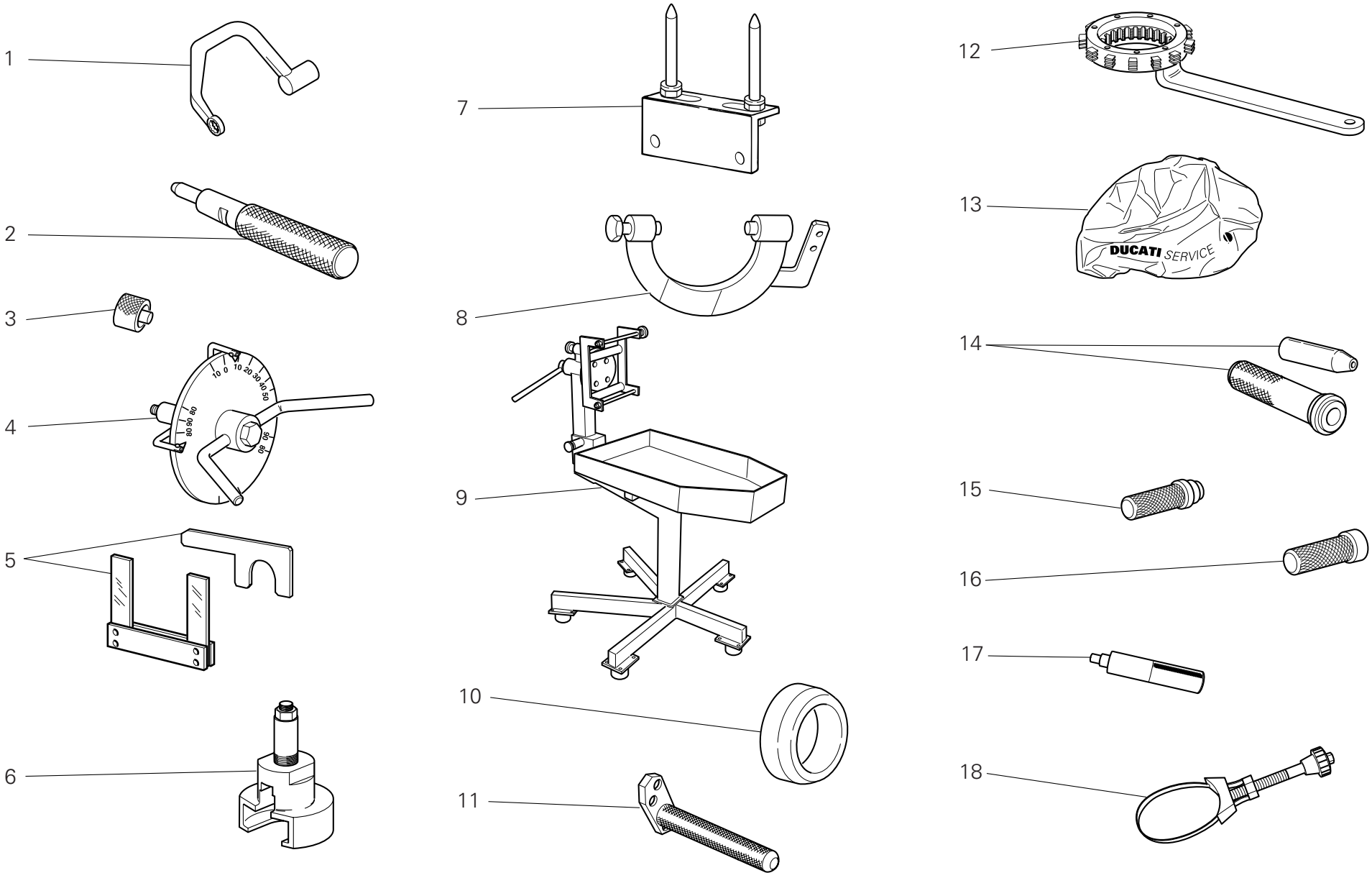

DRAWING 001 Workshop service tools

NOTES NO.	CODE NO.	DESCRIPTION	VALIDITY	Q.TY
1	88713.2676	Head nuts holder wrench		1
2	88713.2442	Tool to drive valve seal ring ø7		1
3	88765.1298	Spacer for checking lower valve shim		1
4	88713.0123	Degree wheel holder tool for ignition advance check		1
5	88713.2878	Spacer and fork feeler gauge 0,2/0,3 mm		1
6	88713.2092	Extractor for primary drive gear		1
7	88713.2103	Head mounting base		1
8	88713.2874	Flywheel Wrench		1
9	88713.1832	Bench for engine repair		1
10	88700.5665	Sleeve for installing clutch bell gear		1
11	88713.2827	Plate for positioning gear engagement fork		1
12	88713.2133	Wrench to hold cluch housing drum steady		1
13	88713.1886	Engine canvas		1
14	88700.5749	Crankcases assembling cap		1
15	88713.0869	Tool for assembling water pump front seal		1
16	88713.0870	Tool for assembling water pump front seal		1
17	88713.2669	Roller cage fitting tool on primary shaft		1
18	88713.2906	Wrench to tighten oil filter cartridge		1

NOTES NO.	CODE NO.	DESCRIPTION	VALIDITY	Q.TY

CATALOGUE No: 915.1.290.1B
ISSUED: 04 - 09

DRAWING 001a Workshop service tools

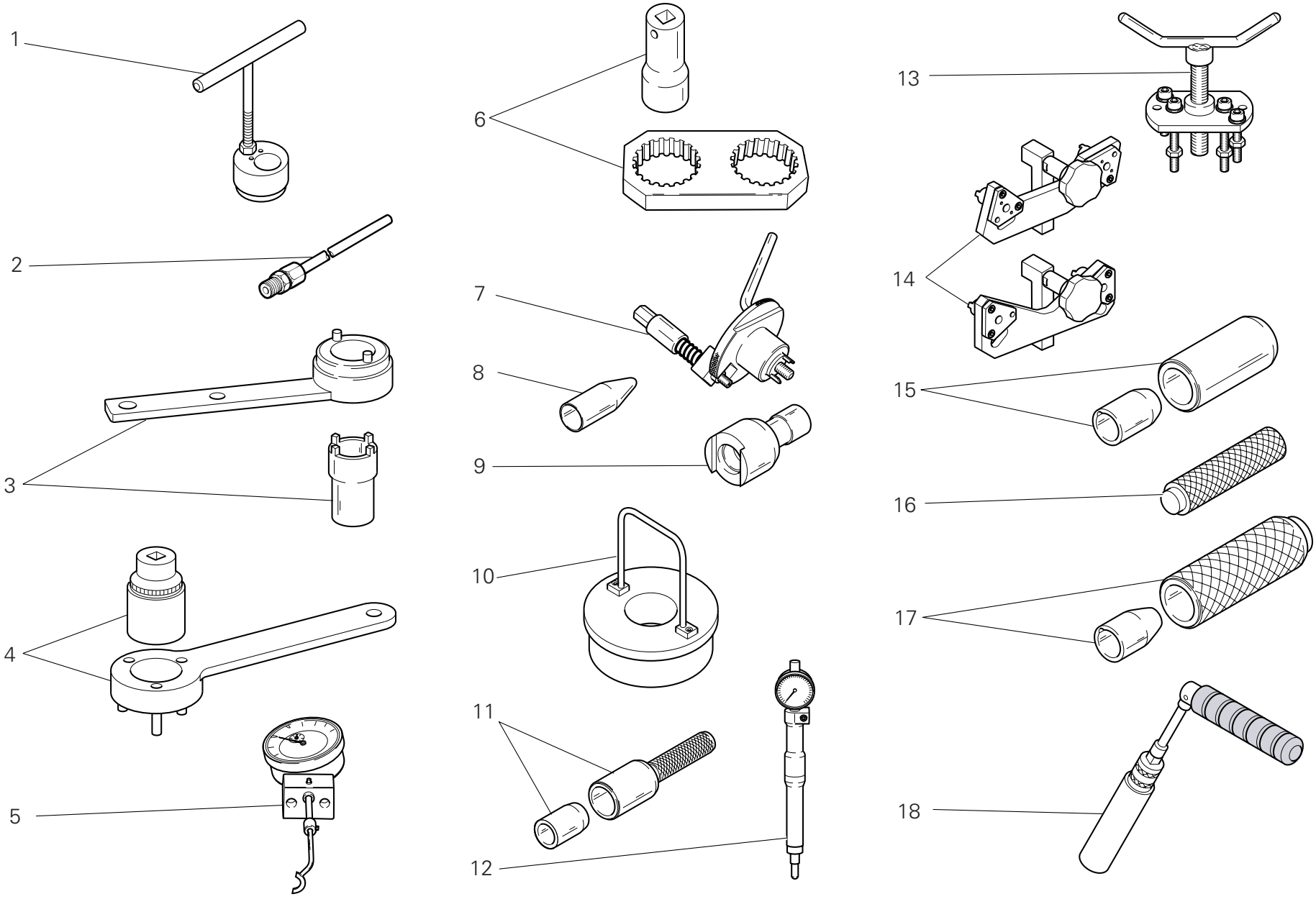

DRAWING 001a Workshop service tools

NOTES NO.	CODE NO.	DESCRIPTION	VALIDITY	Q.TY
1	88713.2832	Wrench for tensioning mobile belt tensioner		1
2	88713.1010	Union for exhaust gas suction		1
3	88713.1805	Driving roller tightening tool		1
4	88713.2102	Primary drive gear tightening tool		1
5	88765.1518	Valve lift gauge		1
6	88713.1806	Reaction tool for belt roller tightening		1
7	88713.2011	Tool to hold crankshaft in TDC position		1
8	88713.1920	Tool to fit O-rings onto stud bolts		1
9	88713.1821	Wrench to tighten tensioning bolts		1
10	88713.2870	Con-rod guiding tool		1
11	88713.2060	Seal ring driving tool		1
12	88765.1188	T.D.C. control gauge		1
13	88713.1749	Drive roller puller		1
14	88765.1524	Belt roller timing tool		1
15	88713.2861	Tool to fit seals on camshafts		1
16	88713.1980	Drift to drive retainers onto shafts		1
17	88713.2834	Snap ring installation tool		1
18	88713.2877	Spark plug tool		1

NOTES NO.	CODE NO.	DESCRIPTION	VALIDITY	Q.TY

CATALOGUE No: 915.1.290.1B
ISSUED: 04 - 09

DRAWING 001b Workshop service tools

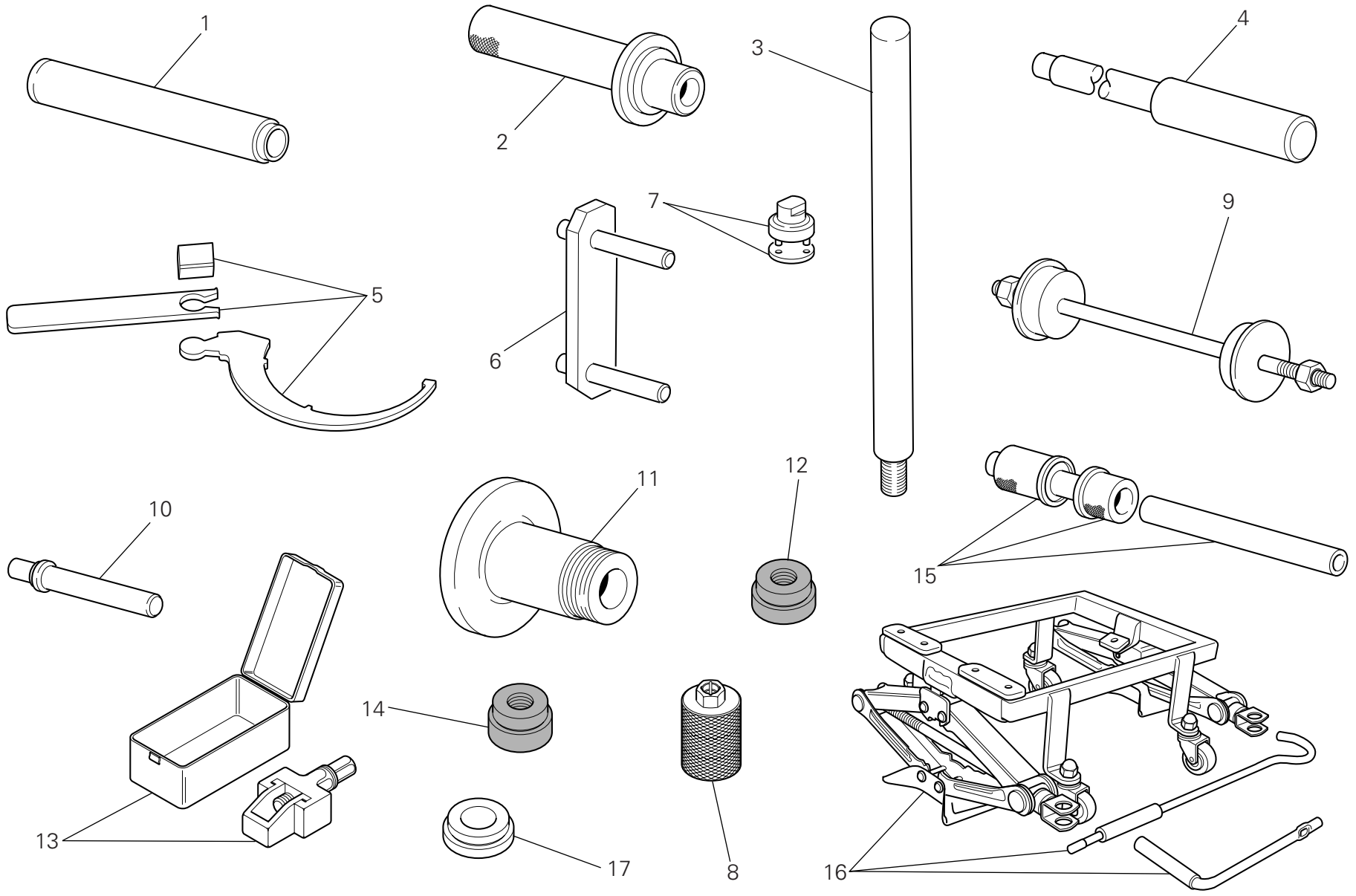

DRAWING 001b Workshop service tools

NOTES NO.	CODE NO.	DESCRIPTION	VALIDITY	Q.TY
1	88713.1072	Stopper for driving the half bearing of the steering head base		1
2	88713.1068	Stopper for assembling the rear fork roller bearings		1
3	88713.2855	Bushing support bar (OHLINS)		1
4	88713.1074	Stopper for disassembling the swingarm pivot		1
5	88713.3211	Wrench for adjusting the eccentric hub		1
6	88713.1515	Frame/engine mount		1
7	88713.1058	Wrench for assembling the steering head cap		1
8	88713.2854	Bush for installing/removing the fork plug (OHLINS)		1
9	88713.1062	Tool for assembling the steering head bearings		1
10	88713.1071	Stopper for assembling the rocker needle bearings		1
11	88713.2951	Tool for balancing rear wheel		1
12	88713.2857	Tool for removing the sliding bushings (OHLINS)		1
13	88713.2562	Tool for assembling chain		1
14	88713.2858	Tool for installing the sliding bushings (OHLINS)		1
15	88713.2409	Tool for assembling the swingarm ball bearings		1
16	88713.3220	Bench for engine repair		1
17	88713.2856	Bar guide tool (OHLINS)		1

NOTES NO.	CODE NO.	DESCRIPTION	VALIDITY	Q.TY

CATALOGUE No: 915.1.290.1B
ISSUED: 04 - 09

DRAWING 001c Dds tester

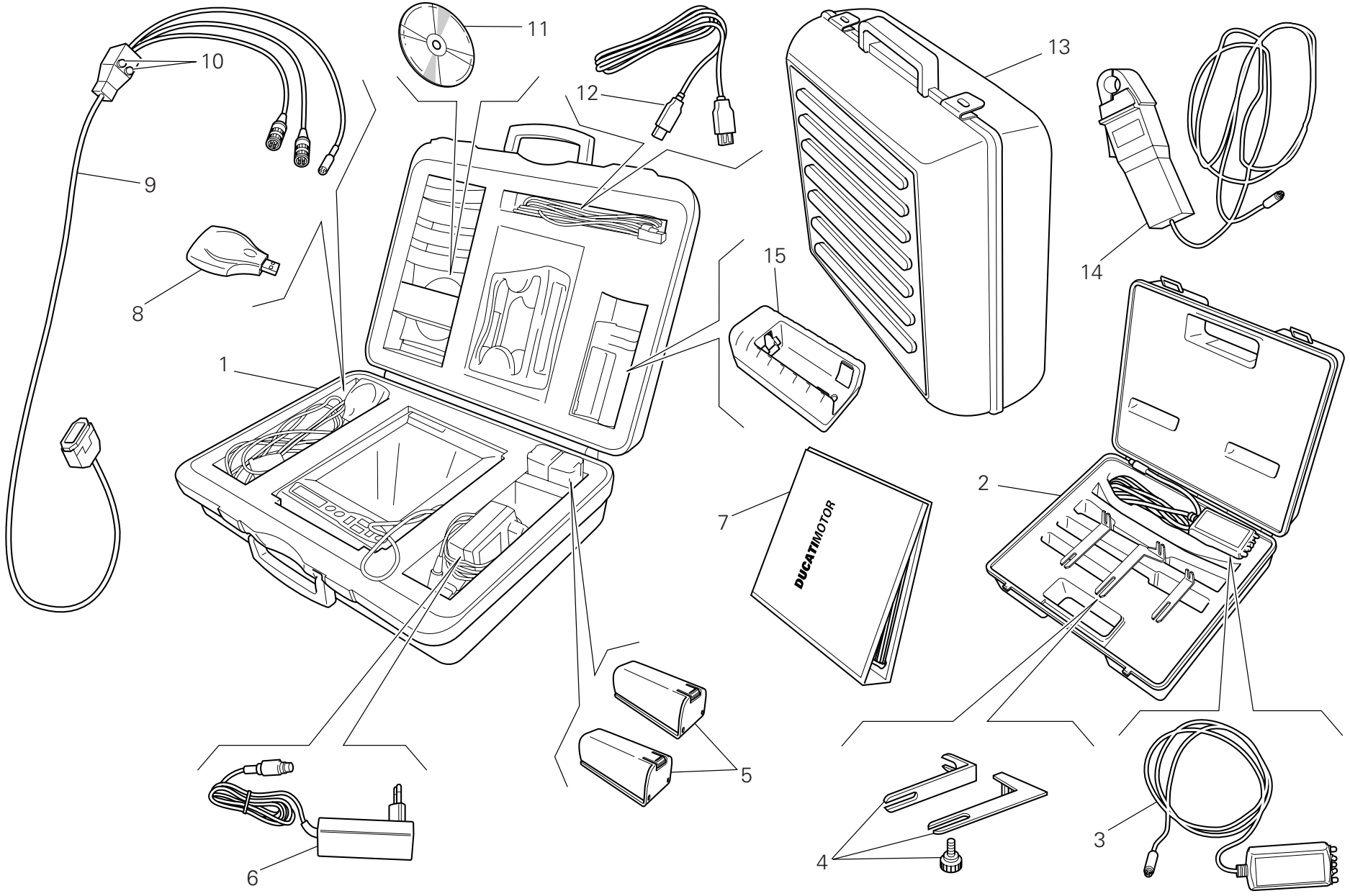

DRAWING 001c Dds tester

NOTES NO.	CODE NO.	DESCRIPTION	VALIDITY	Q.TY
1	97900.0215	DDS (Ducati Diagnosis System) + manifold vacuum meter. kit		1
2	97900.0002	Belt tensioning kit		1
3	88765.1371	Sensor		1
4	88765.1374	Bracket		1
5	97900.0216	Battery		2
6	97900.0224	Feeder		1
7	97900.0232	DDS manual		1
8	97900.0225	(USB) Memory card reader		1
9	97900.0222	Main cable 1060838		1
10	97900.0219	Fuse		2
11	97900.0223	Software DDS CD		1
12	97900.0226	(USB) Cable extension		1
13	97900.0229	Black case with sponge rubber		1
14	88765.1126V	Amperometer plier		1
15	97900.0217	Battery charger		1

NOTES NO.	CODE NO.	DESCRIPTION	VALIDITY	Q.TY

CATALOGUE No: 915.1.290.1B
ISSUED: 04 - 09

DRAWING 001d Workshop service tools

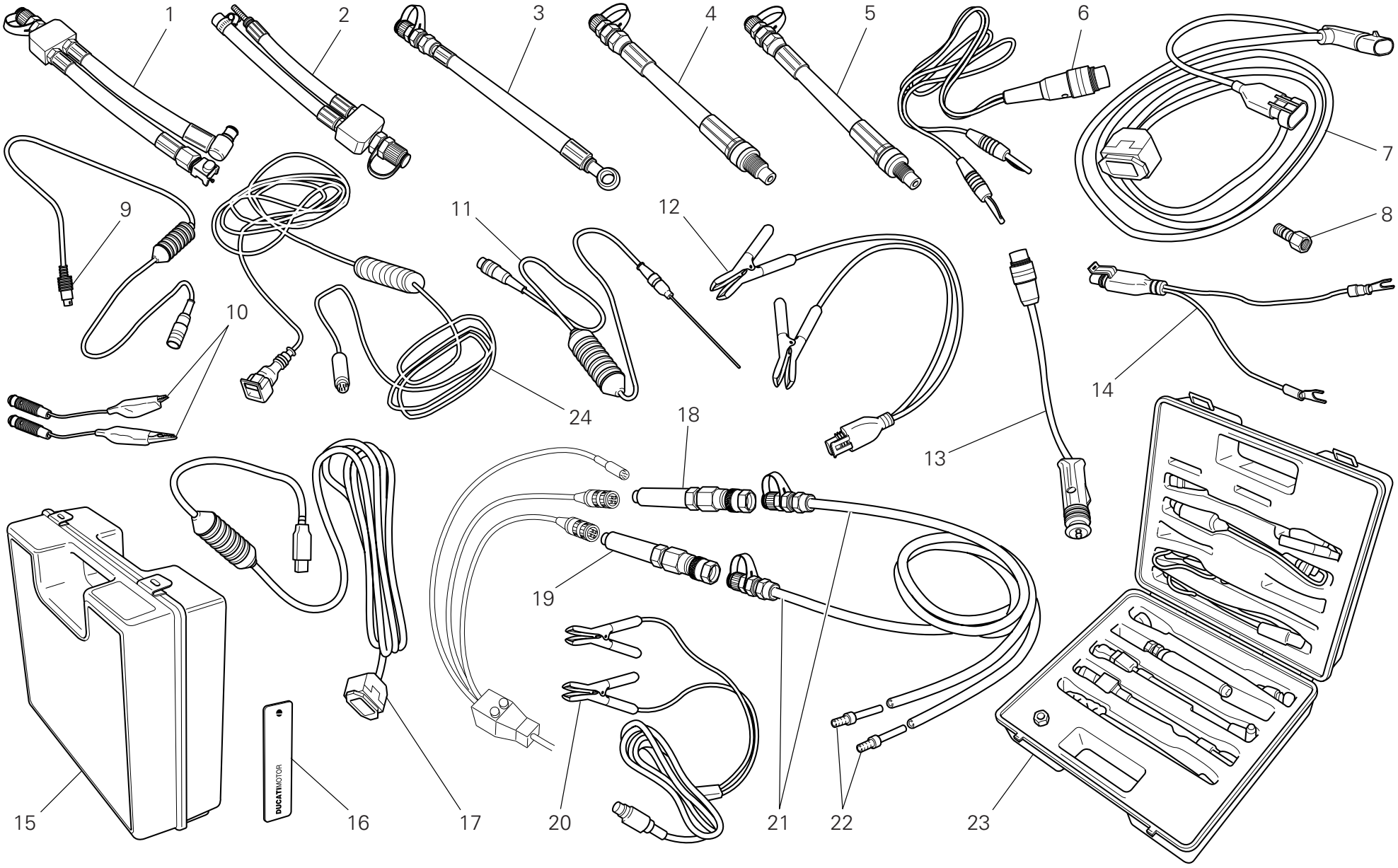

DRAWING 001d Workshop service tools

NOTES NO.	CODE NO.	DESCRIPTION	VALIDITY	Q.TY
1	590.1.189.1A	Fuel pressure line HS.		1
2	590.1.190.1A	Fuel pressure line ST/SS/M.		1
3	875.1.065.1A	Oil pressure line		1
4	552.1.037.1A	Fitting - cylinder compression M12		1
5	552.1.038.1A	Fitting - cylinder compression M10		1
6	514.1.037.1A	Cable Volt PF DUC 21		1
7	97900.0227	Main cable (MARELLI)		1
8	814.1.114.1A	Oil pressure fitting		1
9	514.1.032.1A	Cable for supplementary tests		1
10	514.1.035.1A	Red clamp cable		1
10	514.1.036.1A	Black clamp cable		1
11	552.1.040.1A	Temperature probe		1
12	97900.0228	Battery connection adapter		1
13	514.1.033.1A	Electric lighter connection adapter (ST)		1
14	514.1.038.1A	Battery connection adapter		1
15	698.1.033.1A	Red case with sponge rubber		1
16	88765.1126T	DUCATI sticker RH/LH side		2
17	97900.0231	(USB) Adaptor		1
18	97900.0218	Depressure sensor		1
19	552.1.039.1A	Pressure sensor		1
20	97900.0230	Feeder		1
21	97900.0220	Depressure/pressure line		2
22	97900.0221	Union		4
23	97900.0003	Pressure kit		1
24	88765.1126C	Cable for potentiometer adjustement		1

CATALOGUE No: 915.1.290.1B
ISSUED: 04 - 09

DRAWING 002 Gearchange control

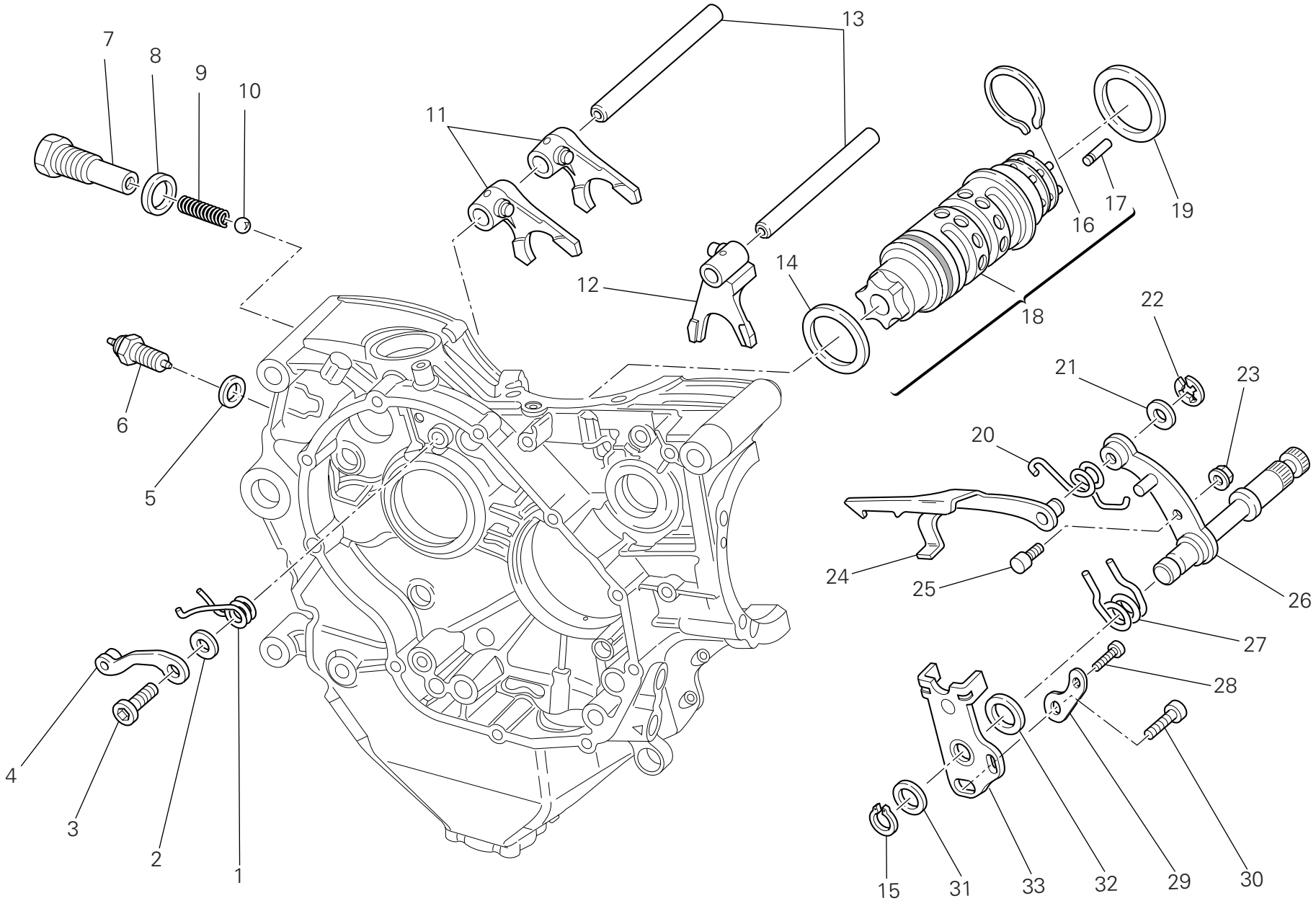

DRAWING 002 Gearchange control

NOTES NO.	CODE NO.	DESCRIPTION	VALIDITY	Q.TY
1	799.1.049.1A	Return spring		1
2	852.1.053.2A	Washer		1
3	779.1.039.1A	Special screw		1
4	455.2.003.1A	Gear stopper assembly		1
5	852.5.024.1A	Gasket th.1		1
6	539.1.021.1B	Switch		1
7	779.1.203.3A	Special screw		1
8	0272.91.090	Gasket		1
9	0660.13.143	Gear selector spring		1
10	76835.1134	Ball		1
11	180.1.001.1A	1st,4th-2nd,3rd gear selector fork		2
12	180.1.002.1A	5th,6th gear selector fork		1
13	821.1.268.1A	Fork pin		2
14	852.1.005.1A	Shim th. 1		1
15	73500.1542	Circlip		1
16	882.1.006.1A	Needle retaining ring (square cross-section)		1
17	821.1.070.1A	Pin		6
18	182.2.028.3A	Complete gearbox drum		1
19	852.1.094.1A	Shim th. 0.9		1
20	799.1.482.1A	Fork return spring		1
21	0400.09.050	Shim th. 0.5		1
21	0765.92.205	Shim th. 0.2		2
22	884.5.034.1A	Ring		1
23	748.1.040.1A	Nut		1
24	180.1.008.1A	Gearbox drum control fork		1
25	0660.13.165	Gearchange lever pin		1
26	821.1.001.1A	Pin with gearchange lever		1
27	0799.13.110	Gearchange lever return spring		1
28	771.5.067.0Z	Screw		1
29	713.1.915.1A	Spacer		1
30	771.5.125.0Z	Screw		1
31	0400.29.125	Shim th. 0.2		2
31	0400.29.126	Shim th. 0.5		1
32	881.1.012.1A	Centering ring		1
33	826.1.030.1A	Stopper plate		1

CATALOGUE No: 915.1.290.1B
ISSUED: 04 - 09

DRAWING 003 Gearbox

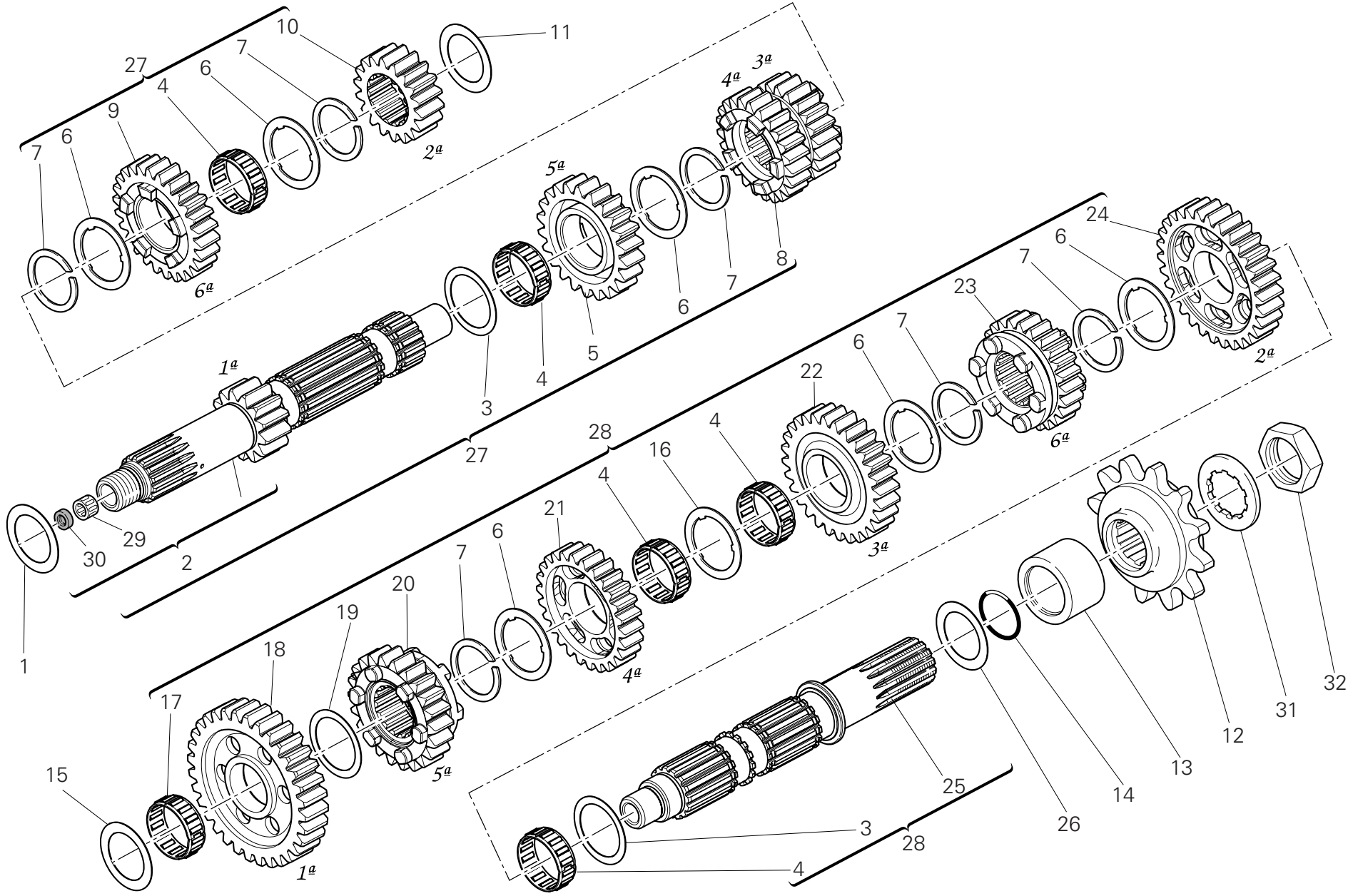

DRAWING 003 Gearbox

NOTES NO.	CODE NO.	DESCRIPTION	VALIDITY	Q.TY
1	0251.47.054	Shim th. 1.2		1
2	150.2.105.1A	Gearbox main shaft		1
3	0670.16.150	Shim th. 0.5		2
4	701.4.005.1A	Needle bearing		5
5	172.1.004.3C	Driving gear 5th sp.		1
6	856.1.001.1A	Grooved washer th. 0.5		6
7	0670.16.145	Snap ring		6
8	172.1.003.3C	Driving gear 3rd/4th sp.		1
9	172.1.005.3C	Driving gear 6th sp.		1
10	172.1.002.1B	Driving gear 2nd sp.		1
11	713.1.014.1E	Shim th. 1.6		1
12	449.1.053.1A	Chain sprocket		1
13	713.1.393.1A	Spacer		1
14	463.2.053.7A	O-ring		1
15	713.1.266.1A	Spacer th. 3,15		1
16	856.1.031.1A	Grooved washer th. 0.5		1
17	76402.0002	Needle bearing		1
18	172.1.218.2A	Driven gear 1st sp.		1
19	0670.16.155	Shim th. 1		1
20	172.1.010.3C	Driven gear 5th sp.		1
21	172.1.009.1C	Driven gear 4th sp.		1
22	172.1.008.1C	Driven gear 3rd sp.		1
23	172.1.011.3C	Driven gear 6th sp.		1
24	172.1.219.2A	Driven gear 2nd sp.		1
25	149.1.061.1A	Gearbox lay shaft		1
26	0670.16.170	Shim th. 0.8		1
27	150.2.106.1A	Complete main shaft		1
28	150.2.092.3A	Complete lay shaft		1
29	702.5.044.1A	Needle bearing		1
30	930.4.002.2A	Seal ring		1
31	851.1.004.1A	Lock washer		1
32	750.1.007.1A	Nut		1

CATALOGUE No: 915.1.290.1B
ISSUED: 04 - 09

DRAWING 004 Clutch

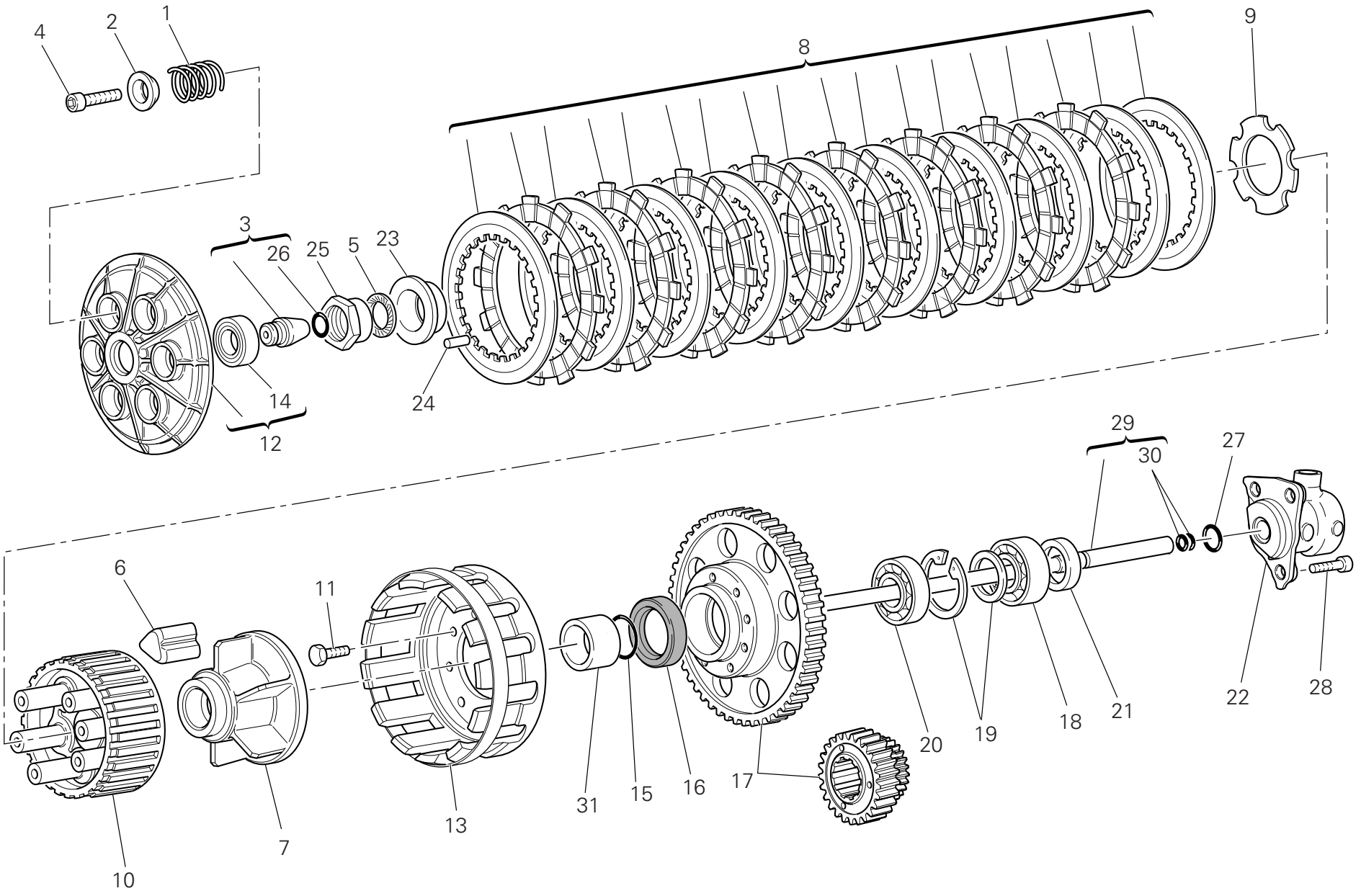

DRAWING 004 Clutch

NOTES NO.	CODE NO.	DESCRIPTION	VALIDITY	Q.TY
1	799.1.253.1A	Clutch spring		6
2	841.1.051.1B	Retainer		6
3	818.2.009.1A	Clutch control pin		1
4	771.5.043.8B	Screw		6
5	851.4.002.1A	Lock washer		1
6	764.1.003.1B	Rubber pad		12
7	162.1.001.1C	Plate holder hub		1
8	190.2.020.1A	Clutch plates set		1
9	851.1.001.1B	Lock washer		1
10	196.1.001.1D	Clutch drum		1
11	70610.8120	Screw		8
12	194.2.043.1A	Pressure plate		1
13	198.1.029.1A	Clutch housing		1
14	702.5.053.1A	Bearing		1
15	463.2.053.7A	O-ring		1
16	930.4.035.1A	Seal ring		1
17	170.2.109.1A	Clutch assembly		1
18	702.5.051.1A	Bearing		1
19	881.2.001.1A	Circlip - spacer		1
20	702.4.017.1A	Bearing		1
21	0660.16.145	Spacer		1
22	195.4.003.1A	Piston assembly		1
23	710.1.124.2A	Bush		1
24	74224.0570	Pin		4
25	748.1.066.2A	Special nut		1
26	886.4.118.1A	O-ring		1
27	886.4.043.1A	O-ring		1

NOTES NO.	CODE NO.	DESCRIPTION	VALIDITY	Q.TY
28	771.5.065.2BB	Screw		3
29	117.2.006.1A	Clutch control rod		1
30	93823.2018	O-ring		2
31	713.1.393.1A	Spacer		1

CATALOGUE No: 915.1.290.1B
ISSUED: 04 - 09

DRAWING 005 Clutch-side crankcase cover

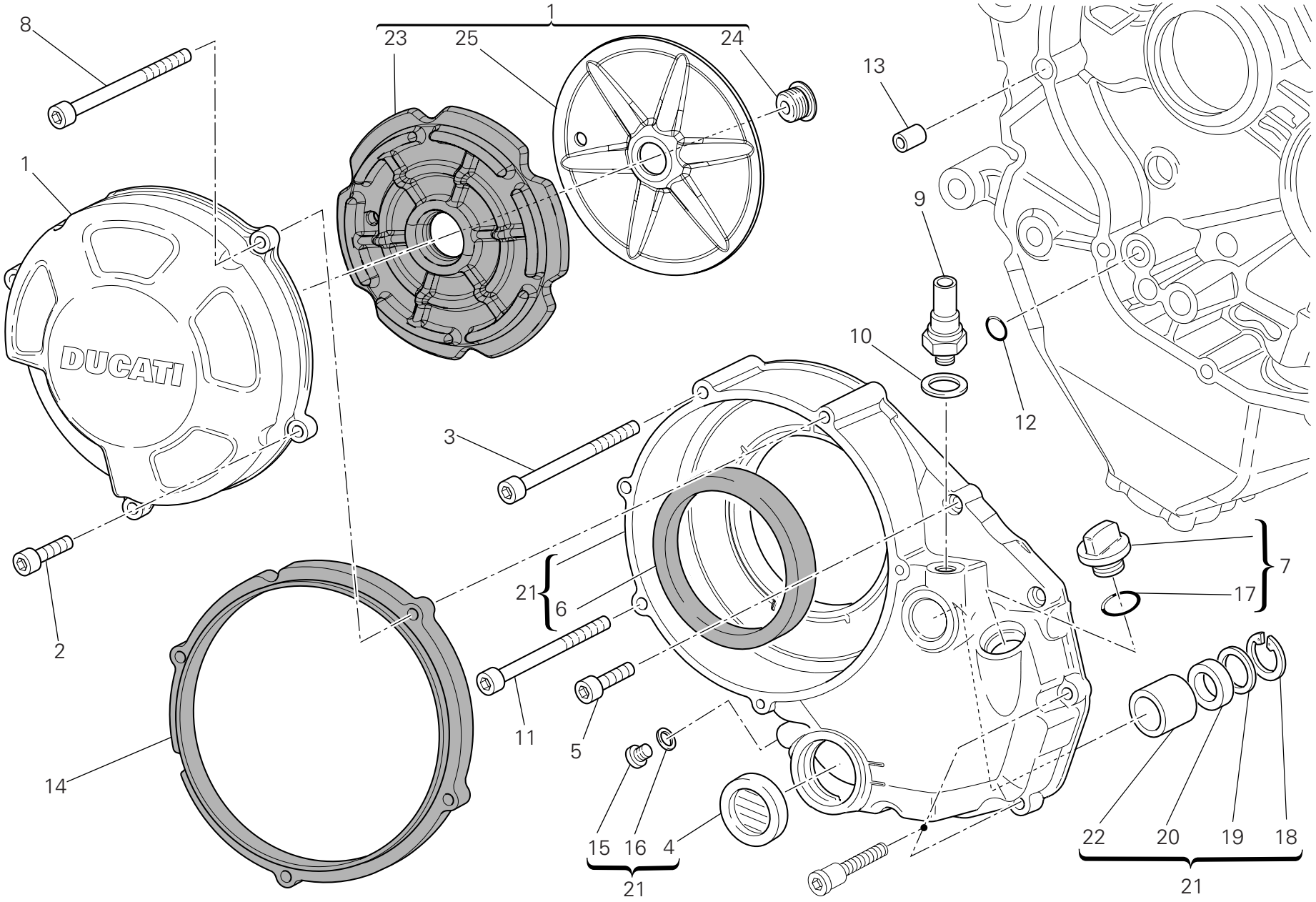

DRAWING 005 Clutch-side crankcase cover

NOTES NO.	CODE NO.	DESCRIPTION	VALIDITY	Q.TY
1	243.2.125.1AC	Cover clutch side (GOLD)		1
2	771.1.052.1A	Screw		2
3	771.5.078.8B	Screw		1
4	254.4.001.2A	Oil level sight glass		1
5	771.5.069.8B	Screw		4
6	930.4.034.1A	Ring		1
7	893.2.013.1A	Complete cap		1
8	771.1.375.1A	Screw		2
9	539.4.030.2A	Switch		1
10	852.1.195.1A	Gasket th.2		1
11	771.5.079.8B	Screw		1
12	886.4.132.1A	O-ring		1
13	711.1.160.1A	Locating bush		1
14	788.1.106.2A	Clutch cover gasket		1
15	780.5.001.1A	Cap		1
16	852.5.024.1A	Gasket th.1		1
17	93823.3075	O-Ring		1
18	884.5.013.1A	Circlip		1
19	852.1.135.1A	Shim th. 1		1
20	930.4.021.1A	Seal ring		1
21	243.2.115.1AE	Cover clutch side (BLACK)		1
22	0665.49.680	Bush		1
23	486.1.082.1A	Panel		1
24	779.1.501.1A	Screw		1
25	827.1.433.1A	Plate		1

NOTES NO.	CODE NO.	DESCRIPTION	VALIDITY	Q.TY

CATALOGUE No: 915.1.290.1B
ISSUED: 04 - 09

DRAWING 006 Connecting rods

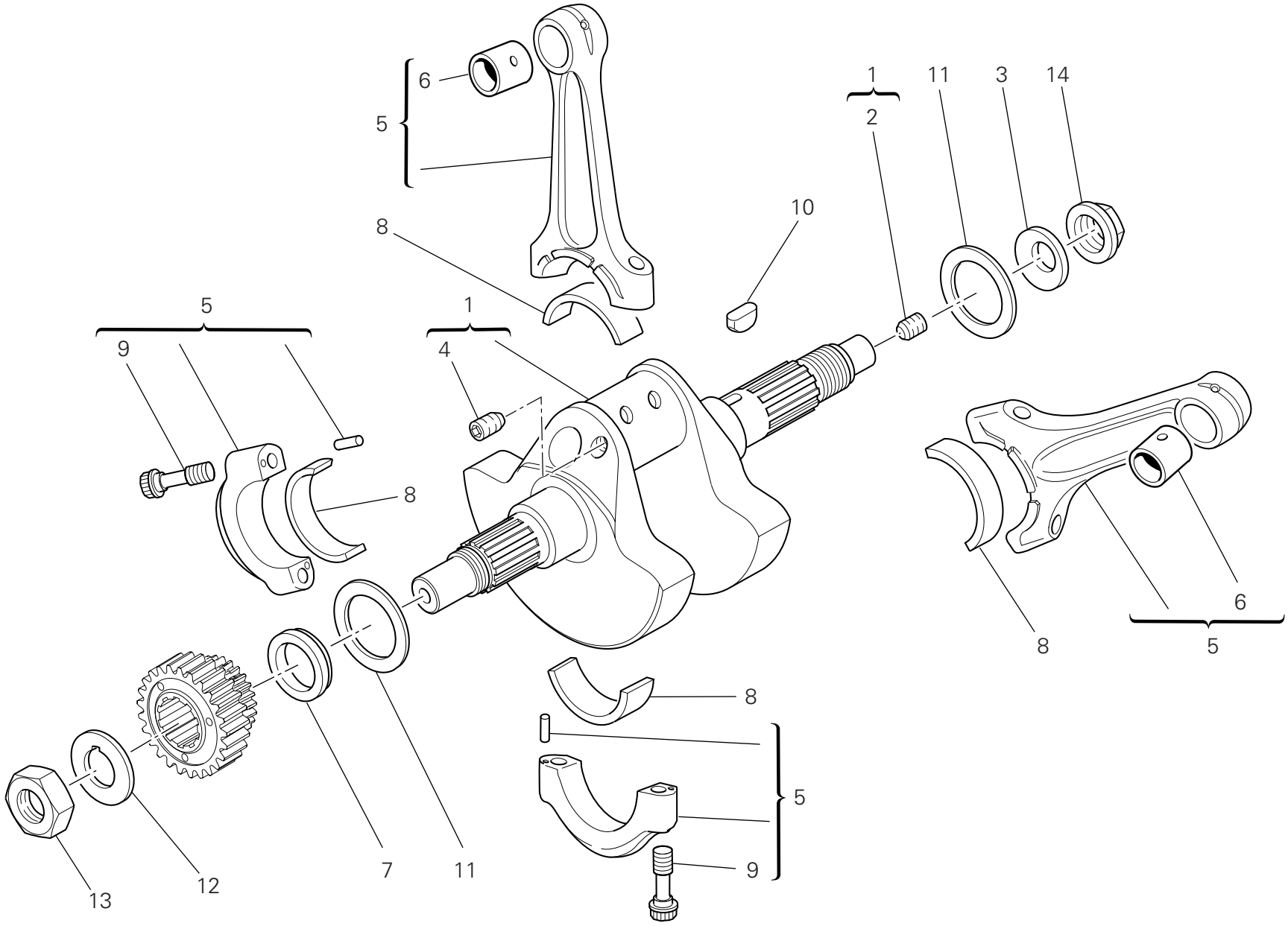

DRAWING 006 Connecting rods

NOTES NO.	CODE NO.	DESCRIPTION	VALIDITY	Q.TY
1	146.2.143.1A	Crankshaft		1
2	779.1.109.2A	Special screw		1
3	799.1.051.2A	Spring washer		1
4	779.1.547.1A	Special screw		2
5	158.2.020.2A	Connecting rods pair		1
6	711.1.089.1A	Bush		2
7	710.1.061.1A	Spacer		1
8	112.1.012.1AB	Half-bearing (BLUE)		2
8	112.1.012.1AC	Half-bearing (YELLOW)		2
9	779.1.404.1A	Special screw		4
10	680.1.013.1A	Woodruff key		1
11	852.1.104.1H	Shim th. 2.25		2
11	852.1.104.2A	Shim th. 1.9		2
11	852.1.104.2B	Shim th. 1.95		2
11	852.1.104.2C	Shim th. 2		2
11	852.1.104.2D	Shim th. 2,05		2
11	852.1.104.2E	Shim th. 2,1		2
11	852.1.104.2F	Shim th. 2,15		2
11	852.1.104.2G	Shim th. 2.2		2
11	852.1.104.2I	Shim th. 2.3		2
11	852.1.104.2J	Shim th. 2.35		2
11	852.1.104.1K	Shim th. 2,4		2
11	852.1.104.1L	Shim th. 2,45		2
11	852.1.104.1M	Shim th. 2.5		2
11	852.1.104.1N	Shim th. 2.55		2
12	851.1.010.1A	Lock washer		1
13	750.1.057.1A	Nut		1
14	750.1.012.2A	Nut		1

CATALOGUE No: 915.1.290.1B
ISSUED: 04 - 09

DRAWING 007 Cylinders - pistons

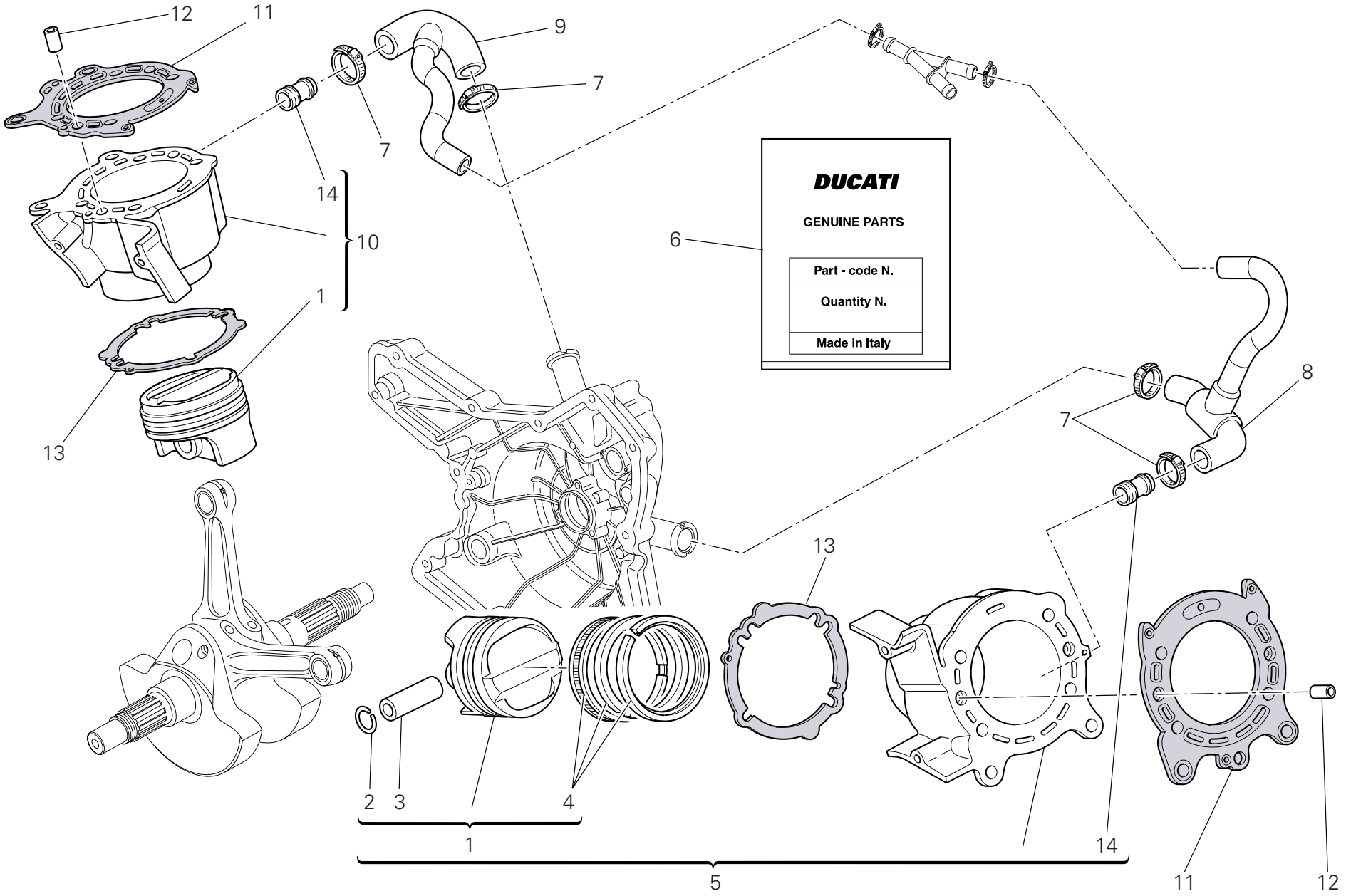

DRAWING 007 Cylinders - pistons

NOTES NO.	CODE NO.	DESCRIPTION	VALIDITY	Q.TY
1	122.2.167.2A	Complete piston		1
2	121.1.079.1A	Piston pin circlip		4
3	121.1.078.1B	Piston pin		2
4	121.2.051.2A	Piston rings set		2
5	120.2.150.4AB	Cylinder-piston fit (horizontal)		1
6	791.2.044.1A	Gaskets set		1
7	741.4.192.1A	Clamp		4
8	800.1.174.2A	Horizontal cylinder water inlet hose		1
9	800.1.175.2A	Vertical cylinder water inlet hose		1
10	120.2.151.4AB	Cylinder-piston fit (vertical)		1
11	786.1.092.2A	Head-cylinder gasket		2
12	711.1.219.1A	Bush		4
13	786.1.094.1A	Cylinder-crankcase gasket		2
14	668.1.001.4A	Water pump delivery filler		2

NOTES NO.	CODE NO.	DESCRIPTION	VALIDITY	Q.TY

CATALOGUE No: 915.1.290.1B
ISSUED: 04 - 09

DRAWING 008 Timing system

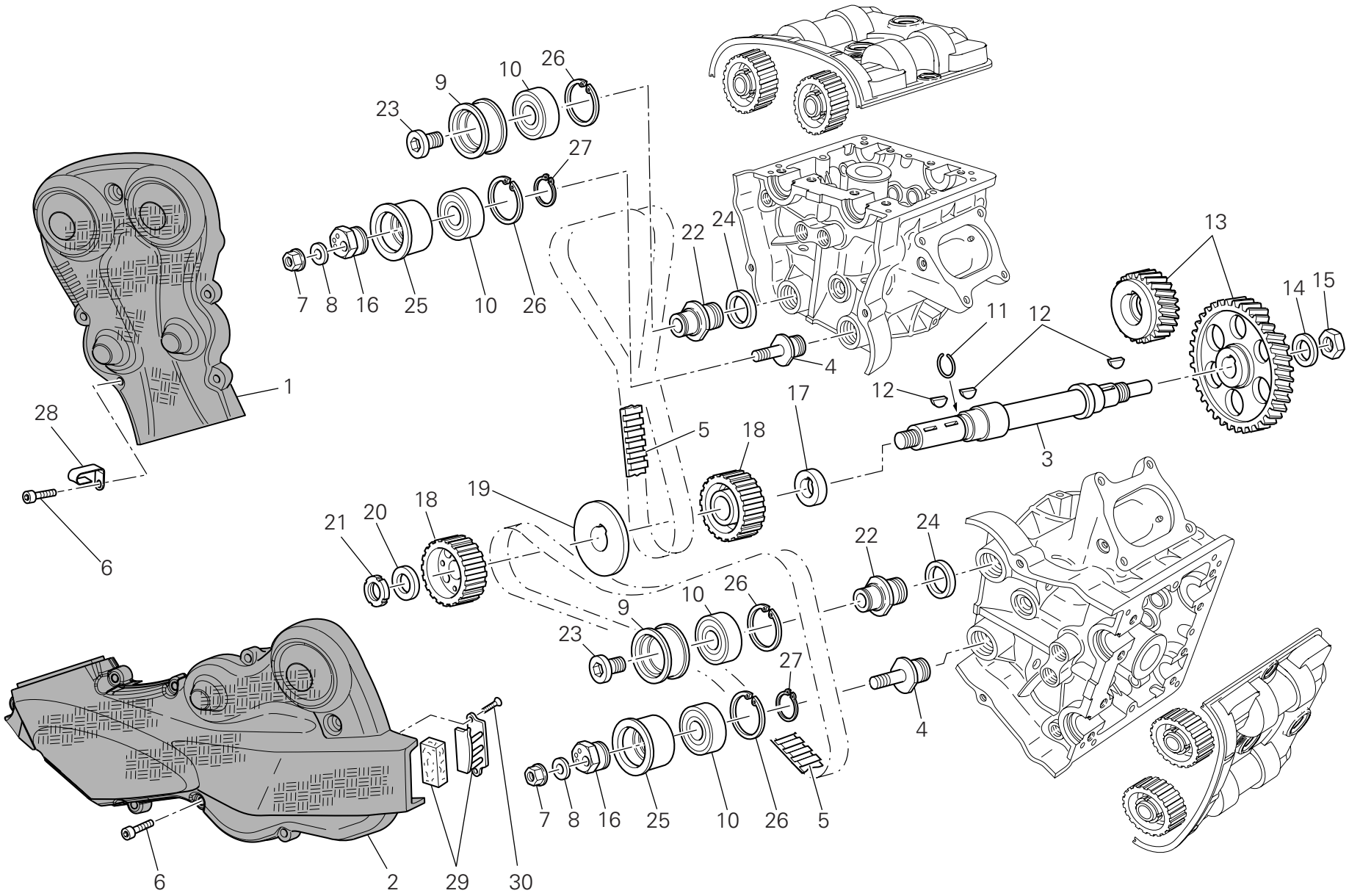

DRAWING 008 Timing system

NOTES NO.	CODE NO.	DESCRIPTION	VALIDITY	Q.TY
1	245.1.109.1A	Vertical belt outer cover (CARBON)		1
2	245.1.108.1A	Horizontal belt outer cover (CARBON)		1
3	147.1.014.2A	Timing lay shaft		1
4	451.1.044.1A	Tensioner roller pin		2
5	737.4.025.1A	Timing drive toothed belt		2
6	771.1.049.1A	Screw		13
7	749.4.008.1A	Nut		2
8	852.1.174.1A	Washer		2
9	451.1.018.2A	Fixed tensioner bush		2
10	702.4.058.1A	Bearing		4
11	882.1.003.1A	Snap ring		1
12	680.1.013.1A	Woodruff key		3
13	171.Z.003.1A	Timing gears pair		1
14	851.1.013.1A	Lock washer		1
15	0124.40.060	Hexagon nut		1
16	451.1.043.1A	Tensioner eccentric		2
17	716.1.128.1A	Spacer		1
18	255.1.010.4B	Timing belt roller		2
19	856.1.062.2A	Belt roller separating washer		1
20	716.1.072.2A	Spacer		1
21	703.5.006.2A	Elastic-stop ring nut		1
22	451.1.017.1A	Fixed tensioner roller pin		2
23	779.1.187.1A	Setscrew		2
24	713.1.409.1A	Spacer		2
25	451.1.047.1A	Movable tensioner roller bush		2
26	73503.3804	Circlip		4
27	73500.2054	Snap ring		2

NOTES NO.	CODE NO.	DESCRIPTION	VALIDITY	Q.TY
28	830.1.494.1B	Fairlead		1
29	245.2.107.1A	Filter and holder		1
30	772.5.034.1A	Screw		2

CATALOGUE No: 915.1.290.1B
ISSUED: 04 - 09

DRAWING 009 Filters and oil pump

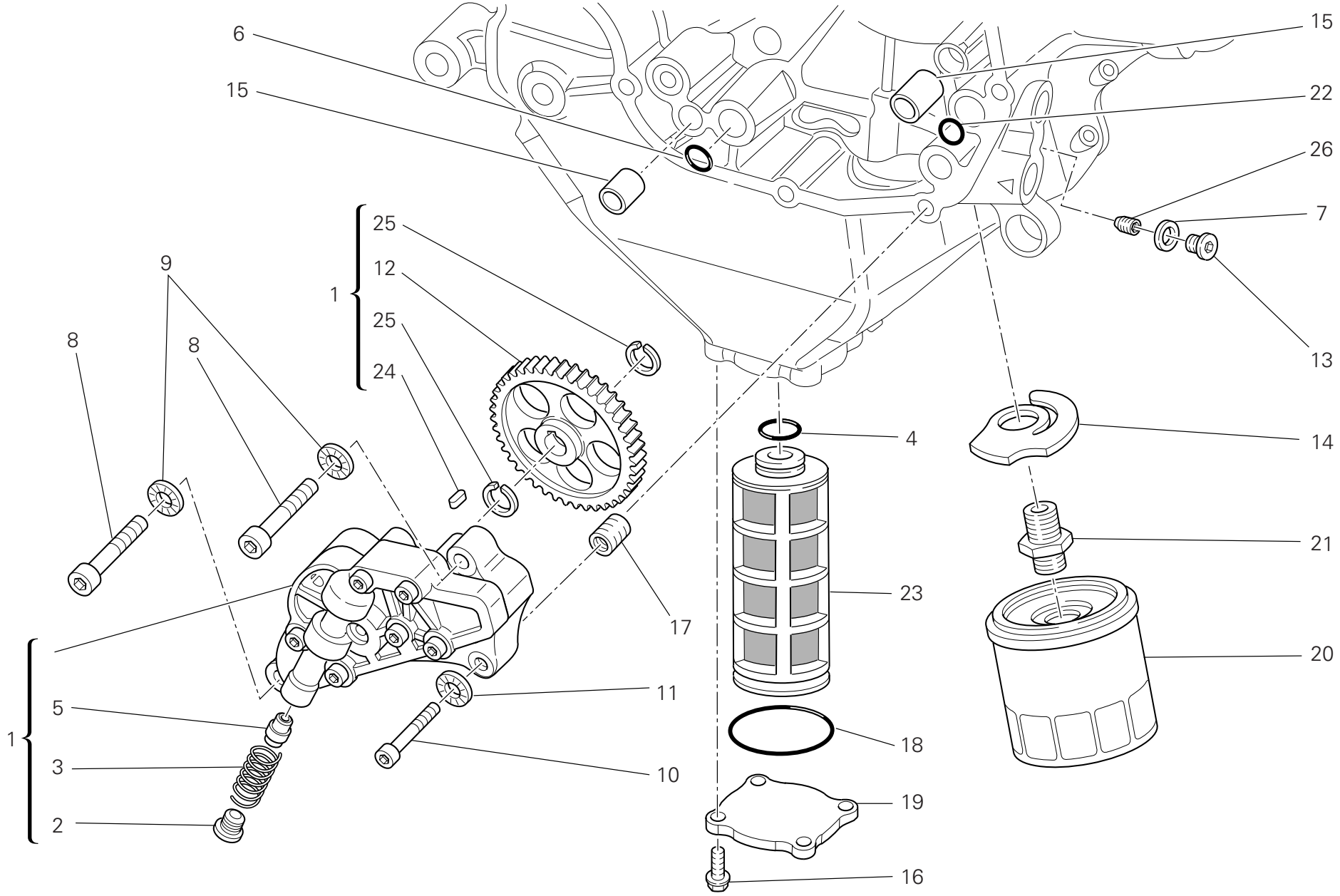

DRAWING 009 Filters and oil pump

NOTES NO.	CODE NO.	DESCRIPTION	VALIDITY	Q.TY
1	174.2.038.1A	Complete oil pump		1
2	780.1.018.1A	Bypass cap		1
3	799.1.055.1A	Bypass spring		1
4	886.4.033.1A	O-ring		1
5	593.1.018.1A	Bypass valve		1
6	886.4.037.1A	O-ring		1
7	852.1.195.1A	Gasket th.2		1
8	771.5.129.8B	Screw		2
9	852.1.174.1A	Washer		2
10	771.5.069.8B	Screw		1
11	852.1.172.1A	Washer		1
12	174.1.038.1A	Pump drive gear		1
13	779.1.162.2A	Cap		1
14	799.2.077.2A	Bypass spring		1
15	0759.49.280	Locating bush		2
16	772.1.060.1A	Screw		4
17	0670.49.310	Reduction bush		1
18	886.4.034.1A	O-ring		1
19	247.1.290.1AB	Cover (BLACK)		1
20	444.4.003.4A	Oil filter cartridge		1
21	815.1.028.1A	Nipple		1
22	886.4.132.1A	O-ring		1
23	894.1.020.1A	Oil net filter		1
24	680.1.001.1B	Woodruff key		1
25	884.5.039.1A	Circlip		2
26	778.5.016.1A	Threaded dowel		1

NOTES NO.	CODE NO.	DESCRIPTION	VALIDITY	Q.TY

CATALOGUE No: 915.1.290.1B
ISSUED: 04 - 09

DRAWING 010 Crankcase halves

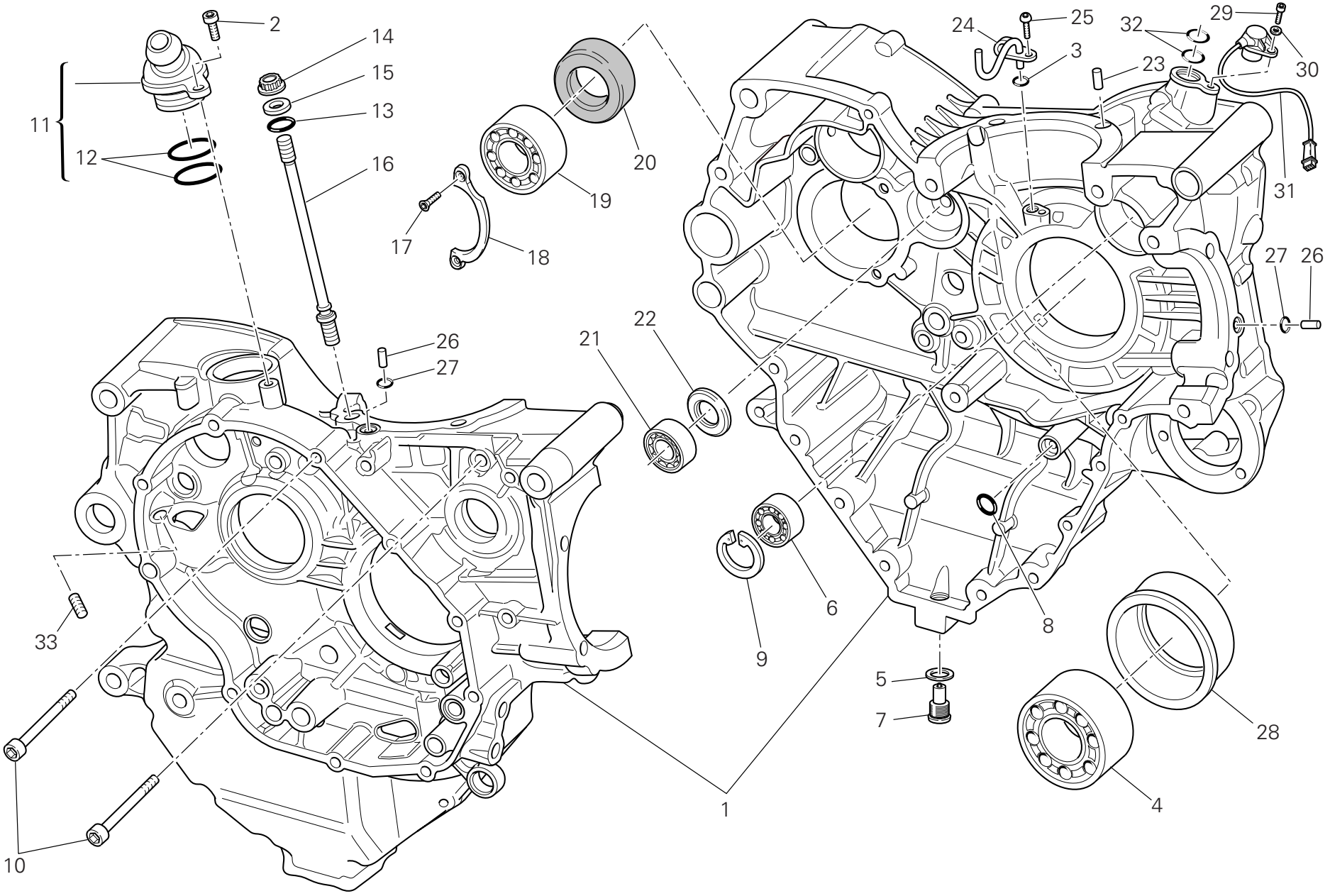

DRAWING 010 Crankcase halves

NOTES NO.	CODE NO.	DESCRIPTION	VALIDITY	Q.TY
1	225.2.248.1A	Complete half-crankcases pair		1
2	771.5.065.8B	Screw		1
3	886.5.013.1A	O-Ring		1
4	75191.3380	Bearing		1
5	852.5.042.1A	Copper gasket sp. 1,5		1
6	702.5.008.1A	Bearing		1
7	893.2.006.2A	Cap		1
8	886.4.132.1A	O-ring		1
9	73503.3380	Circlip		1
10	771.5.139.8B	Screw		2
11	593.2.042.1A	Breather valve		1
12	463.2.022.2A	O-Ring		2
13	886.4.118.1A	O-ring		8
14	748.1.050.1A	Nut		8
15	856.1.064.2A	Special washer		8
16	766.1.055.2B	Stud bolt for fastening head cylinder		8
17	72094.1616	Screw		2
18	826.1.012.1A	Keep plate		1
19	702.4.013.1A	Bearing		1
20	930.4.022.1A	Seal ring		1
21	702.4.033.1A	Bearing		1
22	0370.49.250	Washer		1
23	860.1.004.1A	Locating dowel		2
24	875.1.146.1A	Jet		1
25	775.1.031.1B	Screw		1
26	860.1.005.1A	Locating dowel		2
27	886.1.024.1A	O-Ring		2
28	710.1.125.1A	Bearing holder bush		1
29	775.5.021.1A	Screw		1
30	853.1.003.1A	Spring washer		1
31	552.4.132.1A	Rpm/timing sensor		1
32	886.4.033.1A	O-ring		2
33	778.5.016.1A	Threaded dowel		1

CATALOGUE No: 915.1.290.1B
ISSUED: 04 - 09

DRAWING 010a Crankcase halves

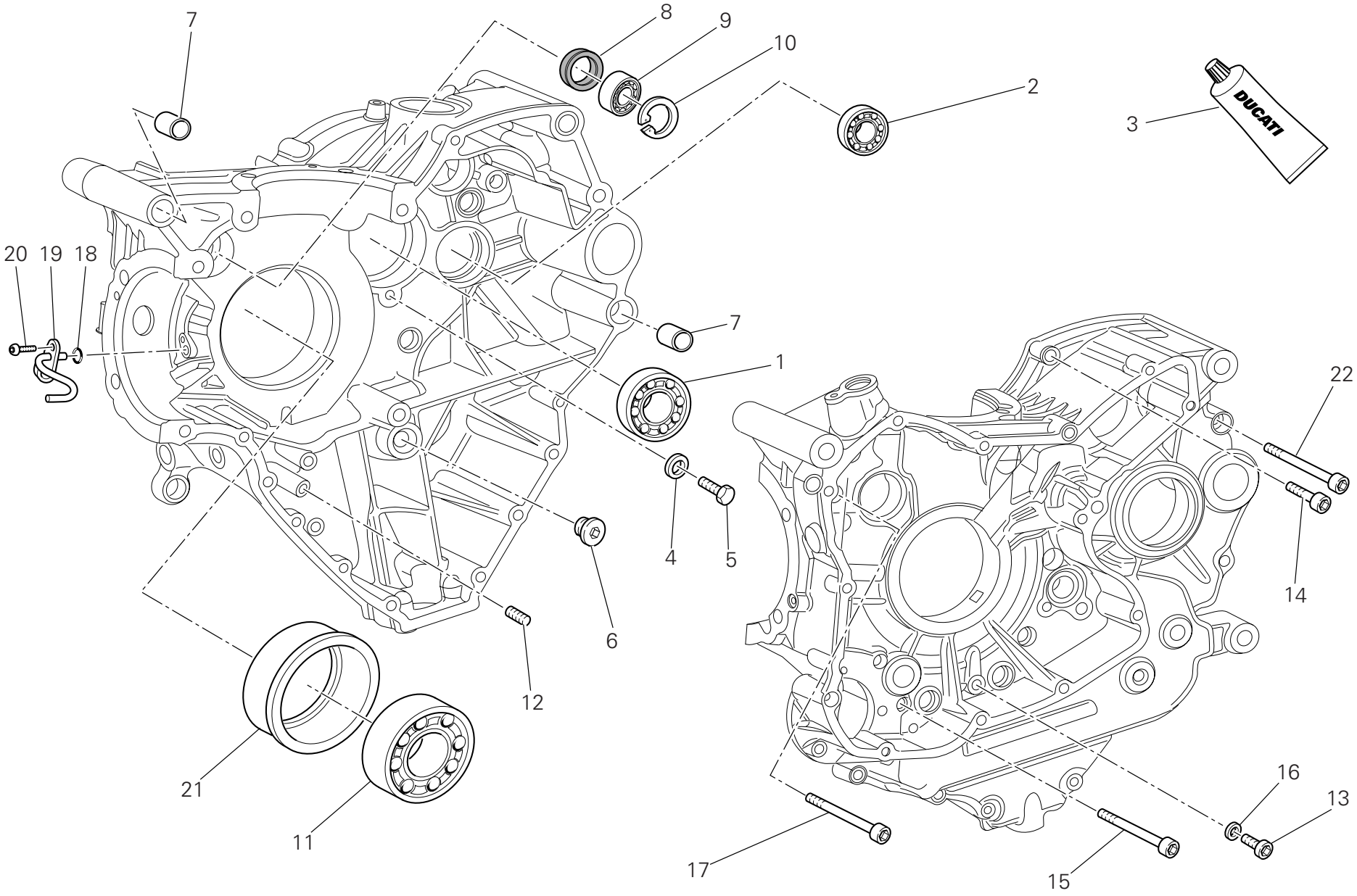

DRAWING 010a Crankcase halves

NOTES NO.	CODE NO.	DESCRIPTION	VALIDITY	Q.TY
1	702.5.019.1A	Bearing		1
2	702.4.033.1A	Bearing		1
3	94247.0014	Fluid sealant		1
4	713.1.140.1A	Spacer		2
5	770.5.250.8B	Screw		2
6	780.1.072.1A	Cap		1
7	711.1.095.1A	Bush		2
8	930.4.123.1A	Seal ring		1
9	75794.1542	Bearing		1
10	73503.3380	Circlip		1
11	702.4.020.1A	Bearing		1
12	778.5.016.1A	Threaded dowel		1
13	773.5.061.8B	Screw		1
14	771.5.072.8B	Screw		8
15	771.5.080.8B	Screw		2
16	852.5.023.1A	Gasket		1
17	771.5.139.8B	Screw		2
18	886.5.013.1A	O-Ring		1
19	875.1.146.1A	Jet		1
20	775.1.031.1B	Screw		1
21	710.1.126.1A	Bearing holder bush		1
22	771.5.136.8B	Screw		3

NOTES NO. CODE NO. DESCRIPTION VALIDITY Q.TY

CATALOGUE No: 915.1.290.1B
ISSUED: 04 - 09

DRAWING 011 Water pump-altr-side crnkcse cover

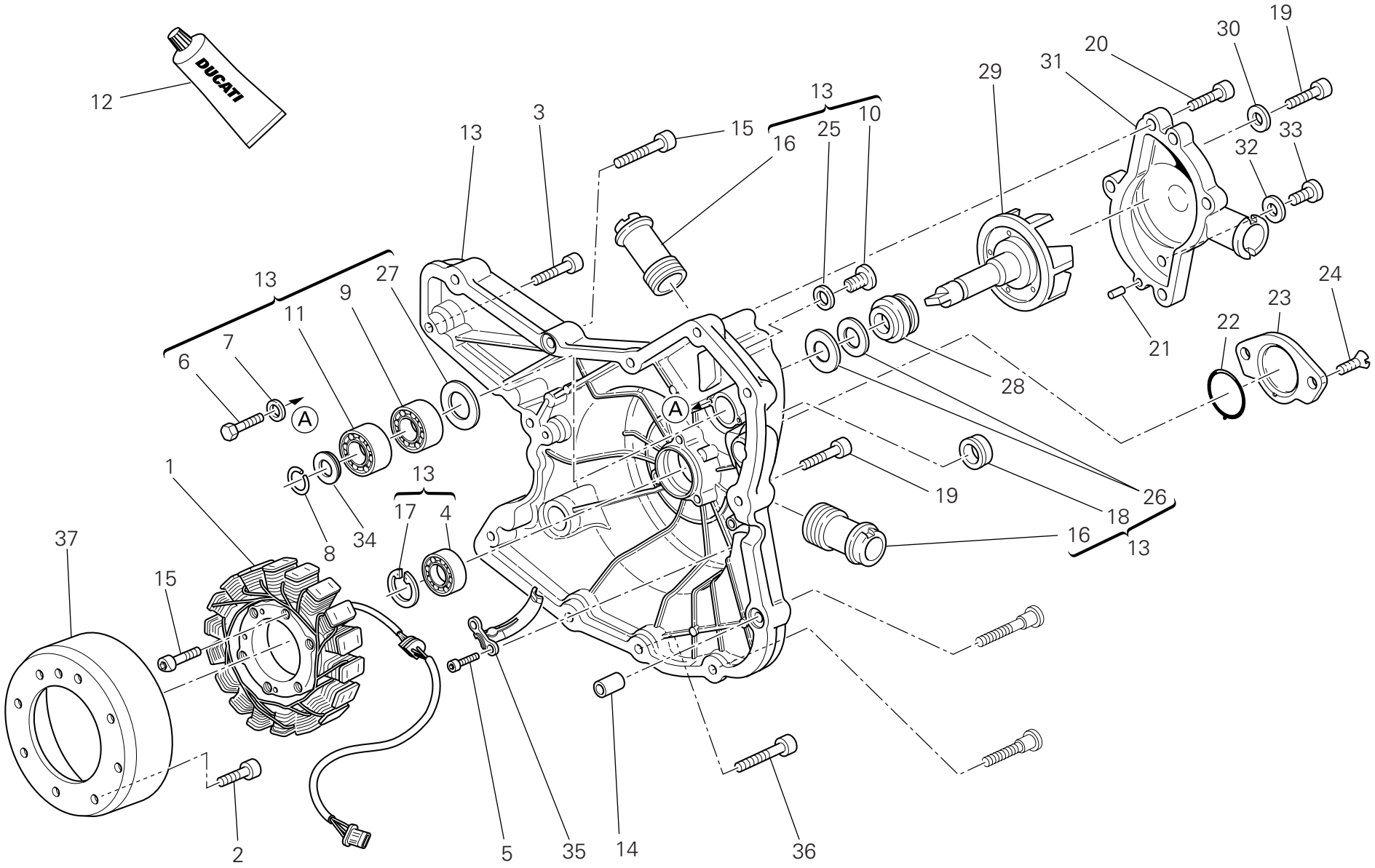

DRAWING 011 Water pump-altr-side crnkcse cover

NOTES NO.	CODE NO.	DESCRIPTION	VALIDITY	Q.TY
1	264.4.059.1A	Stator "KOKUSAN"		1
2	779.4.075.1A	Screw		8
3	771.5.067.8B	Screw		2
4	702.5.008.1A	Bearing		1
5	771.5.064.8B	Screw		2
6	770.5.250.8B	Screw		2
7	852.1.172.1A	Washer		2
8	884.5.011.1A	A 10 Ring		1
9	702.4.010.2A	Bearing		1
10	779.1.026.2A	Screw		1
11	702.4.009.1A	Bearing		1
12	94247.0014	Fluid sealant		1
13	242.2.074.1AC	Generator cover (BLACK)		1
14	711.1.160.1A	Locating bush		2
15	771.5.071.8B	Screw		1
16	668.1.001.4A	Water pump delivery filler		2
17	73503.3380	Circlip		1
18	93783.1524	Seal ring		1
19	771.5.069.8B	Screw		7
20	771.5.066.8B	Screw		4
21	860.1.004.1A	Locating dowel		2
22	886.1.095.1A	O-ring		1
23	247.1.305.1AF	Cover (BLACK)		1
24	777.5.049.8B	Screw		2
25	852.5.026.1A	Aluminium gasket th.1,5		1
26	930.5.005.1A	Seal		1
27	713.1.128.1B	Spacer		1
28	930.5.006.2B	Mechanical seal		1
29	251.2.008.1A	Water pump fan		1
30	852.5.023.1A	Gasket		1
31	247.2.130.1AC	Complete water pump cover (BLACK)		1
32	852.5.024.1A	Gasket th.1		1
33	780.5.001.1A	Cap		1
34	852.1.114.1A	Washer		1
35	830.1.235.1A	Bracket		1
36	771.1.051.8B	Screw		1
37	264.4.053.2A	Rotor "KOKUSAN"		1

CATALOGUE No: 915.1.290.1B
ISSUED: 04 - 09

DRAWING 012 Electric starting and ignition

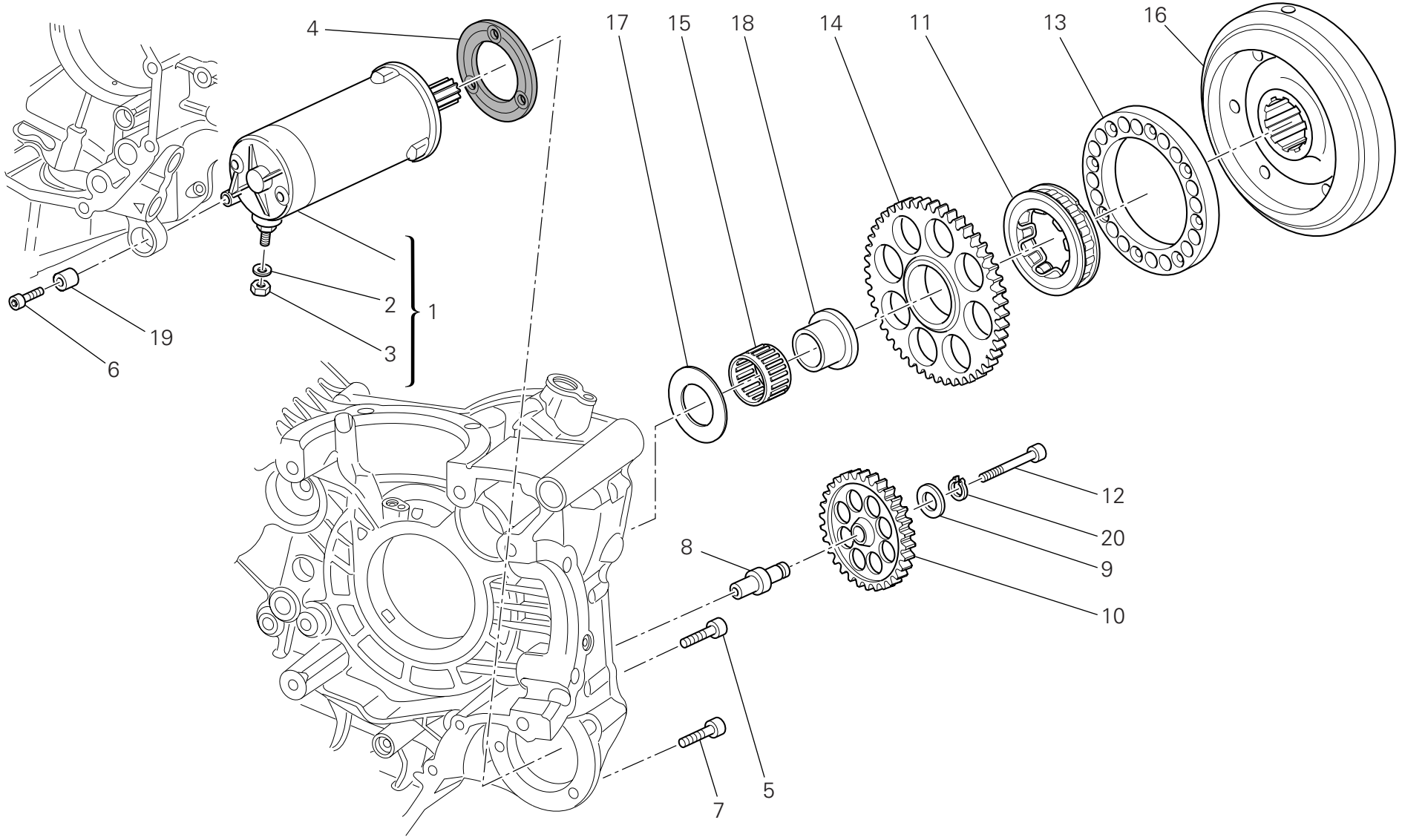

DRAWING 012 Electric starting and ignition

NOTES NO.	CODE NO.	DESCRIPTION	VALIDITY	Q.TY
1	270.4.010.1A	Complete starter motor		1
2	853.1.003.1A	Spring washer		1
3	750.1.121.1A	Nut		1
4	788.1.054.2A	Starter motor gasket		1
5	771.1.049.1A	Screw		2
6	771.1.052.1A	Screw		1
7	771.5.069.8B	Screw		1
8	821.1.309.3A	Intermediate gear pin		1
9	856.1.071.1A	Washer		1
10	176.1.020.1A	Intermediate gear assembly		1
11	701.4.023.1A	Starter clutch		1
12	771.5.078.8B	Screw		1
13	160.1.370.1A	Flange		1
14	173.1.022.1A	Electric starter driven gear		1
15	702.4.018.1A	Needle bearing		1
16	276.1.038.2A	Ignition flywheel		1
17	856.1.075.1A	Shim		1
18	881.1.034.1A	Inner ring		1
19	700.1.036.1A	Flexible bush		1
20	73500.1440	Circlip		1

NOTES NO.	CODE NO.	DESCRIPTION	VALIDITY	Q.TY

CATALOGUE No: 915.1.290.1B
ISSUED: 04 - 09

DRAWING 013 Cylinder head : timing system

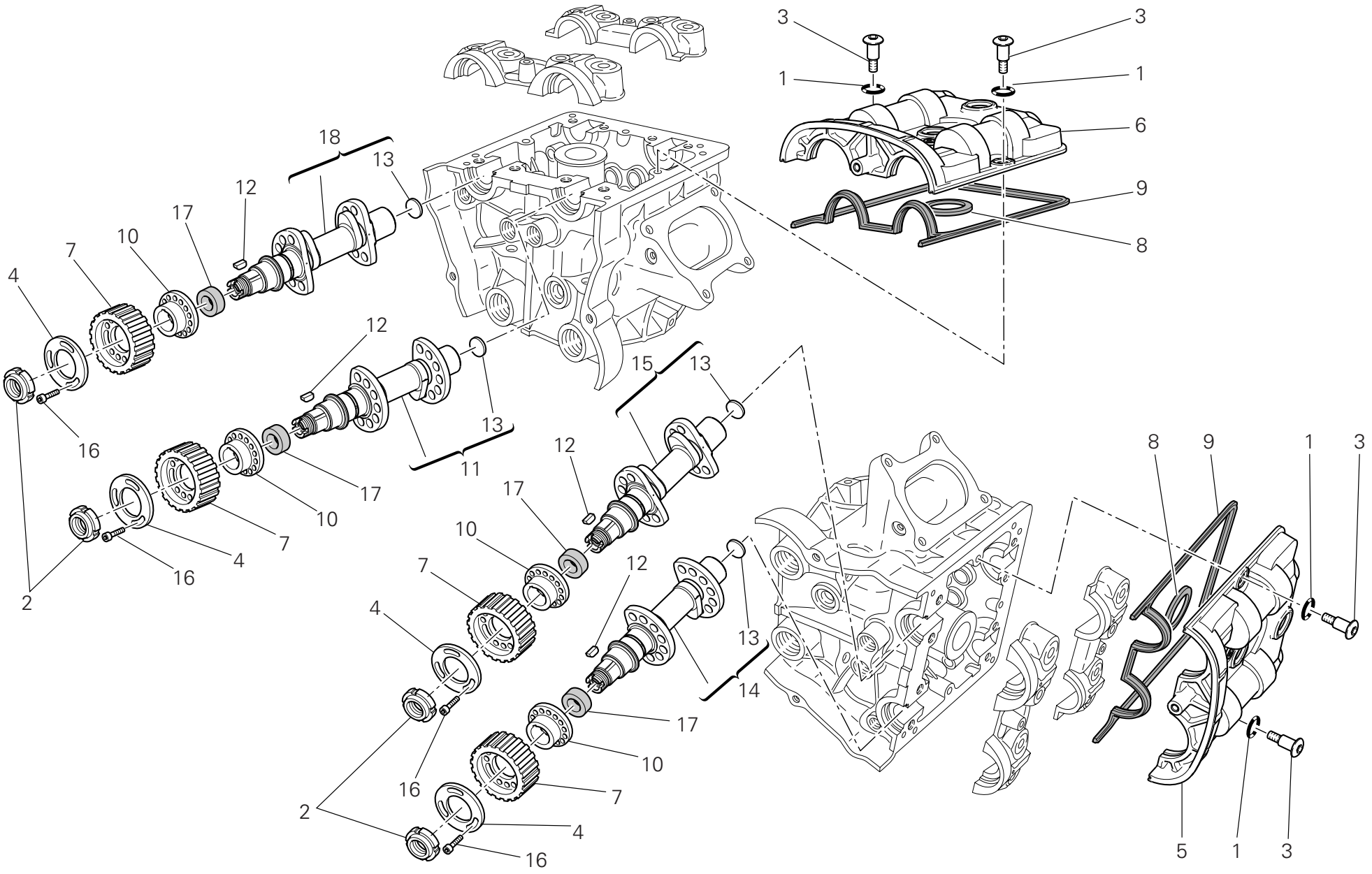

DRAWING 013 Cylinder head : timing system

NOTES NO.	CODE NO.	DESCRIPTION	VALIDITY	Q.TY
1	886.5.051.1A	O-ring		8
2	703.5.002.2A	Ring nut		4
3	779.1.509.2A	Special screw		8
4	856.1.074.2A	Special washer		4
5	247.1.287.1B	Horizontal cover		1
6	247.1.288.1B	Vertical cover		1
7	255.1.019.3A	Timing belt roller		4
8	788.1.094.1A	Gasket		2
9	788.1.093.1A	Head gasket		2
10	160.1.094.1A	Spacer		4
11	148.2.307.2A	Vertical intake camshaft		1
12	680.5.006.1A	Woodruff key		4
13	873.1.005.1A	Cap		4
14	148.2.308.2A	Horizontal exhaust camshaft		1
15	148.2.306.2A	Horizontal intake camshaft		1
16	779.5.030.2A	Screw		12
17	930.5.007.1A	Seal ring		4
18	148.2.309.2A	Vertical exhaust camshaft		1

NOTES NO.	CODE NO.	DESCRIPTION	VALIDITY	Q.TY

CATALOGUE No: 915.1.290.1B
ISSUED: 04 - 09

DRAWING 014 Vertical cylinder head

1 Registro bilanc. apertura Adjustment Réglage Ventilkäppchen	2 Registro bilanc. chiusura Adjustment Réglage Ventilkäppchen
840.1.031.1A - 1,8	840.1.041.2B - 2,2
840.1.032.1A - 1,85	840.1.042.2B - 2,25
840.1.033.1A - 1,9	840.1.043.2B - 2,3
840.1.034.1A - 1,95	840.1.044.2B - 2,35
840.1.001.1A - 2,0	840.1.045.2B - 2,4
840.1.002.1A - 2,05	840.1.046.2B - 2,45
840.1.003.1A - 2,1	840.1.047.2B - 2,5
840.1.004.1A - 2,15	840.1.048.2B - 2,55
840.1.005.1A - 2,2	840.1.049.2B - 2,6
840.1.006.1A - 2,25	840.1.050.2B - 2,65
840.1.007.1A - 2,3	840.1.051.2B - 2,7
840.1.008.1A - 2,35	840.1.052.2B - 2,75
840.1.009.1A - 2,4	840.1.053.2B - 2,8
840.1.010.1A - 2,45	840.1.054.2B - 2,85
840.1.011.1A - 2,5	840.1.055.2B - 2,9
840.1.012.1A - 2,55	840.1.056.2B - 2,95
840.1.013.1A - 2,6	840.1.057.2B - 3,0
840.1.014.1A - 2,65	840.1.058.2B - 3,05
840.1.015.1A - 2,7	840.1.059.2B - 3,1
840.1.016.1A - 2,75	840.1.060.2B - 3,15
840.1.017.1A - 2,8	840.1.061.2B - 3,2
840.1.018.1A - 2,85	840.1.062.2B - 3,25
840.1.019.1A - 2,9	840.1.063.2B - 3,3
840.1.020.1A - 2,95	840.1.064.2B - 3,35
840.1.021.1A - 3,0	840.1.065.2B - 3,4
840.1.022.1A - 3,05	840.1.066.2B - 3,45
840.1.023.1A - 3,1	840.1.067.2B - 3,5
840.1.024.1A - 3,15	840.1.068.2B - 3,55
840.1.025.1A - 3,2	840.1.069.2B - 3,6
840.1.026.1A - 3,25	840.1.070.2B - 3,65
840.1.027.1A - 3,3	840.1.071.2B - 3,7
840.1.028.1A - 3,35	840.1.072.2B - 3,75
840.1.029.1A - 3,4	840.1.073.2B - 3,8
840.1.030.1A - 3,45	840.1.074.2B - 3,85
	840.1.075.2B - 3,9
	840.1.076.2B - 3,95
	840.1.077.2B - 4,0
	840.1.078.2B - 4,05
	840.1.079.2B - 4,1
	840.1.080.2B - 4,15
	840.1.081.2B - 4,2
	840.1.082.2B - 4,25
	840.1.083.2B - 4,3
	840.1.084.2B - 4,35
	840.1.085.2B - 4,4
	840.1.086.2B - 4,45
	840.1.087.2B - 4,5

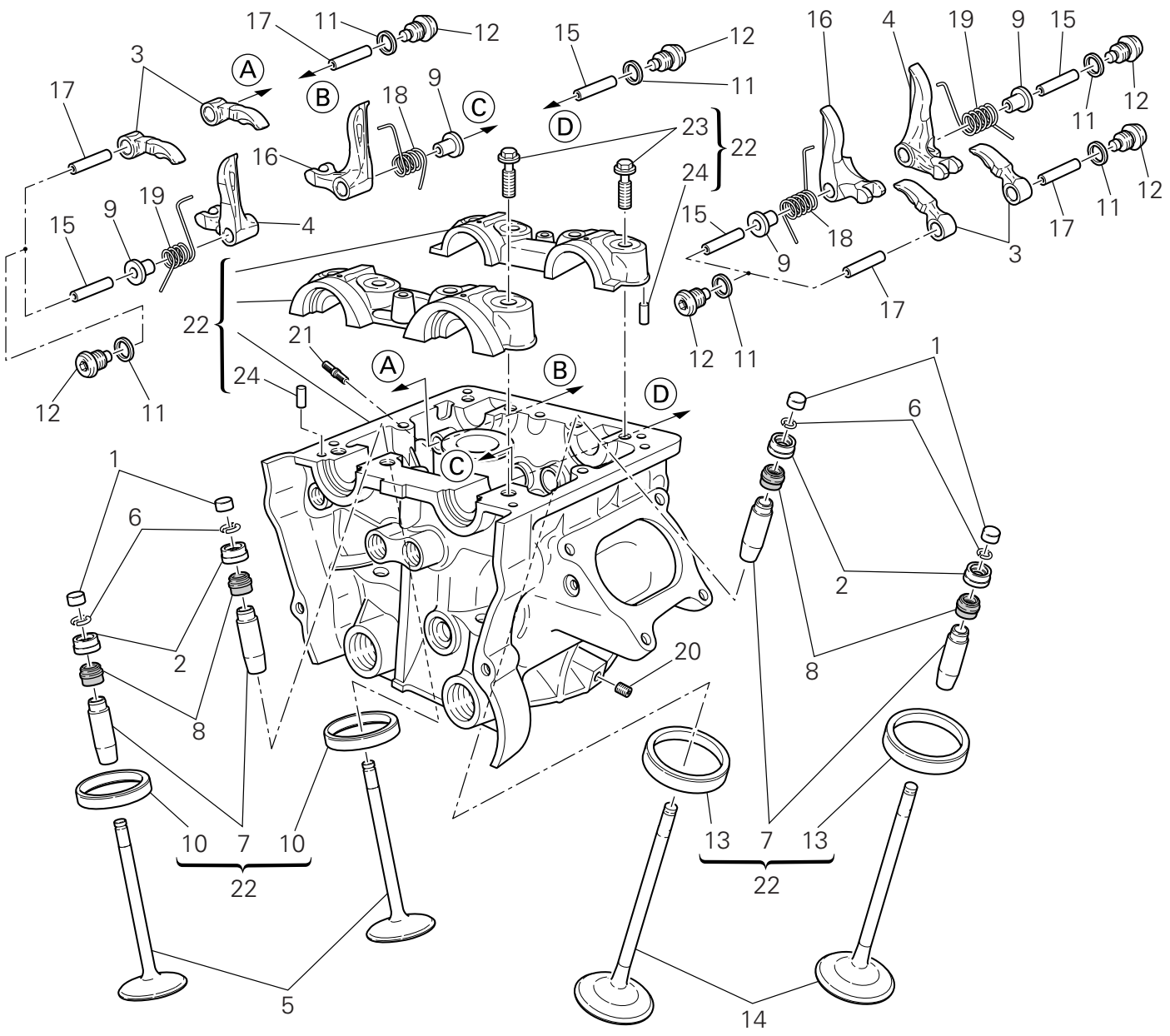

DRAWING 014 Vertical cylinder head

NOTES NO.	CODE NO.	DESCRIPTION	VALIDITY	Q.TY
1	840.2.001.1A	See table		4
2	840.2.002.2B	See table		4
3	208.1.029.1A	Opening rocker		4
4	209.1.036.1A	Closing rocker (L.H.)		2
5	211.1.070.1B	Exhaust valve		2
6	669.1.001.1E	Split rings		8
7	303.1.051.1BB	Oversize valve guide 0.03		4
7	303.1.051.1BC	Oversize valve guide 0.06		4
7	303.1.051.1BD	Oversize valve guide 0.09		4
8	764.1.087.1A	Valve seal		4
9	713.1.292.1A	Spacer		4
10	304.1.063.1A	Exhaust valve seat		2
10	304.1.063.1AB	Oversize exhaust valve seat 0.03		2
10	304.1.063.1AC	Oversize exhaust valve seat 0.06		2
11	852.5.026.1B	Aluminium gasket th.1,5		8
12	780.1.051.1A	Cap		8
13	304.1.064.1B	Intake valve seat		2
13	304.1.064.1BB	Oversize intake valve seat 0.03		2
13	304.1.064.1BC	Oversize intake valve seat 0.06		2
14	210.1.072.1A	Intake valve		2
15	821.1.223.1B	Closing rocker shaft		4
16	209.1.035.1A	Closing rocker (R.H.)		2
17	821.1.222.1B	Opening rocker shaft		4
18	799.1.486.1A	Valve return spring (R.H.)		2
19	799.1.485.1A	Valve return spring (L.H.)		2
20	417.6.011.3A	Threaded dowel		1
21	766.4.019.1A	Stud bolt		3
22	301.2.239.4BB	Complete vertical head		1
23	779.1.421.1A	Special screw		8
24	860.5.006.1A	Pin		4

CATALOGUE No: 915.1.290.1B
ISSUED: 04 - 09

DRAWING 015 Horizontal cylinder head

1 Registro bilanc. apertura Adjustment Réglage Ventilkäppchen	2 Registro bilanc. chiusura Adjustment Réglage Ventilkäppchen
840.1.031.1A - 1,8	840.1.041.2B - 2,2
840.1.032.1A - 1,85	840.1.042.2B - 2,25
840.1.033.1A - 1,9	840.1.043.2B - 2,3
840.1.034.1A - 1,95	840.1.044.2B - 2,35
840.1.001.1A - 2,0	840.1.045.2B - 2,4
840.1.002.1A - 2,05	840.1.046.2B - 2,45
840.1.003.1A - 2,1	840.1.047.2B - 2,5
840.1.004.1A - 2,15	840.1.048.2B - 2,55
840.1.005.1A - 2,2	840.1.049.2B - 2,6
840.1.006.1A - 2,25	840.1.050.2B - 2,65
840.1.007.1A - 2,3	840.1.051.2B - 2,7
840.1.008.1A - 2,35	840.1.052.2B - 2,75
840.1.009.1A - 2,4	840.1.053.2B - 2,8
840.1.010.1A - 2,45	840.1.054.2B - 2,85
840.1.011.1A - 2,5	840.1.055.2B - 2,9
840.1.012.1A - 2,55	840.1.056.2B - 2,95
840.1.013.1A - 2,6	840.1.057.2B - 3,0
840.1.014.1A - 2,65	840.1.058.2B - 3,05
840.1.015.1A - 2,7	840.1.059.2B - 3,1
840.1.016.1A - 2,75	840.1.060.2B - 3,15
840.1.017.1A - 2,8	840.1.061.2B - 3,2
840.1.018.1A - 2,85	840.1.062.2B - 3,25
840.1.019.1A - 2,9	840.1.063.2B - 3,3
840.1.020.1A - 2,95	840.1.064.2B - 3,35
840.1.021.1A - 3,0	840.1.065.2B - 3,4
840.1.022.1A - 3,05	840.1.066.2B - 3,45
840.1.023.1A - 3,1	840.1.067.2B - 3,5
840.1.024.1A - 3,15	840.1.068.2B - 3,55
840.1.025.1A - 3,2	840.1.069.2B - 3,6
840.1.026.1A - 3,25	840.1.070.2B - 3,65
840.1.027.1A - 3,3	840.1.071.2B - 3,7
840.1.028.1A - 3,35	840.1.072.2B - 3,75
840.1.029.1A - 3,4	840.1.073.2B - 3,8
840.1.030.1A - 3,45	840.1.074.2B - 3,85
	840.1.075.2B - 3,9
	840.1.076.2B - 3,95
	840.1.077.2B - 4,0
	840.1.078.2B - 4,05
	840.1.079.2B - 4,1
	840.1.080.2B - 4,15
	840.1.081.2B - 4,2
	840.1.082.2B - 4,25
	840.1.083.2B - 4,3
	840.1.084.2B - 4,35
	840.1.085.2B - 4,4
	840.1.086.2B - 4,45
	840.1.087.2B - 4,5

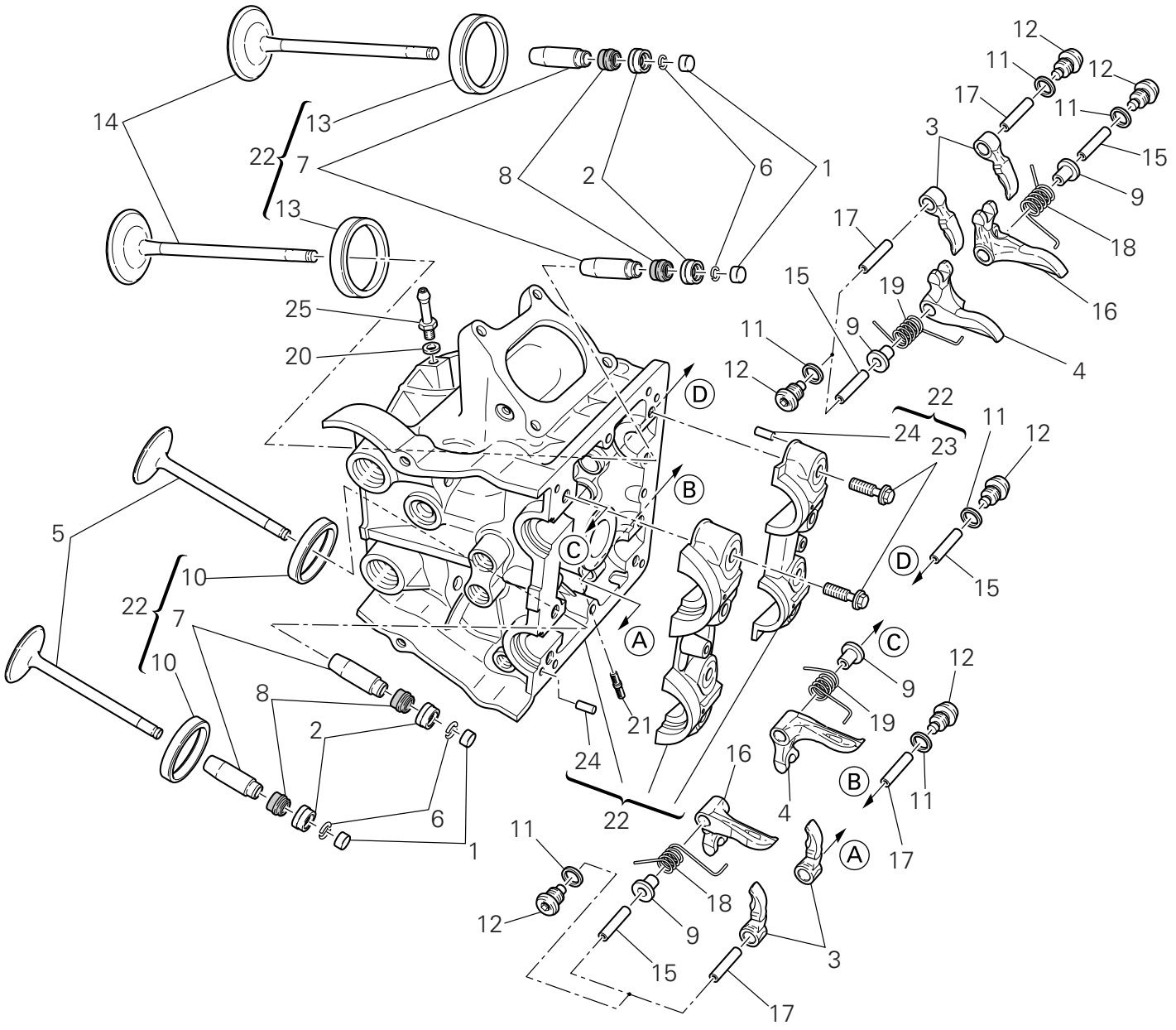

DRAWING 015 Horizontal cylinder head

NOTES NO.	CODE NO.	DESCRIPTION	VALIDITY	Q.TY
1	840.2.001.1A	See table		4
2	840.2.002.2B	See table		4
3	208.1.029.1A	Opening rocker		4
4	209.1.036.1A	Closing rocker (L.H.)		2
5	211.1.070.1B	Exhaust valve		2
6	669.1.001.1E	Split rings		8
7	303.1.051.1BB	Oversize valve guide 0.03		4
7	303.1.051.1BC	Oversize valve guide 0.06		4
7	303.1.051.1BD	Oversize valve guide 0.09		4
8	764.1.087.1A	Valve seal		4
9	713.1.292.1A	Spacer		4
10	304.1.063.1A	Exhaust valve seat		2
10	304.1.063.1AB	Oversize exhaust valve seat 0.03		2
10	304.1.063.1AC	Oversize exhaust valve seat 0.06		2
11	852.5.026.1B	Aluminium gasket th.1,5		8
12	780.1.051.1A	Cap		8
13	304.1.064.1B	Intake valve seat		2
13	304.1.064.1BB	Oversize intake valve seat 0.03		2
13	304.1.064.1BC	Oversize intake valve seat 0.06		2
14	210.1.072.1A	Intake valve		2
15	821.1.223.1B	Closing rocker shaft		4
16	209.1.035.1A	Closing rocker (R.H.)		2
17	821.1.222.1B	Opening rocker shaft		4
18	799.1.486.1A	Valve return spring (R.H.)		2
19	799.1.485.1A	Valve return spring (L.H.)		2
20	852.5.023.1A	Gasket		1
21	766.4.019.1A	Stud bolt		3
22	301.2.238.4BB	Complete horizontal head		1
23	779.1.421.1A	Special screw		8
24	860.5.006.1A	Pin		4
25	814.1.188.1A	Union		1

CATALOGUE No: 915.1.290.1B
ISSUED: 04 - 09

CATALOGUE No: 915.1.290.1B
ISSUED: 04 - 09

DRAWING 016 Heat exchanger

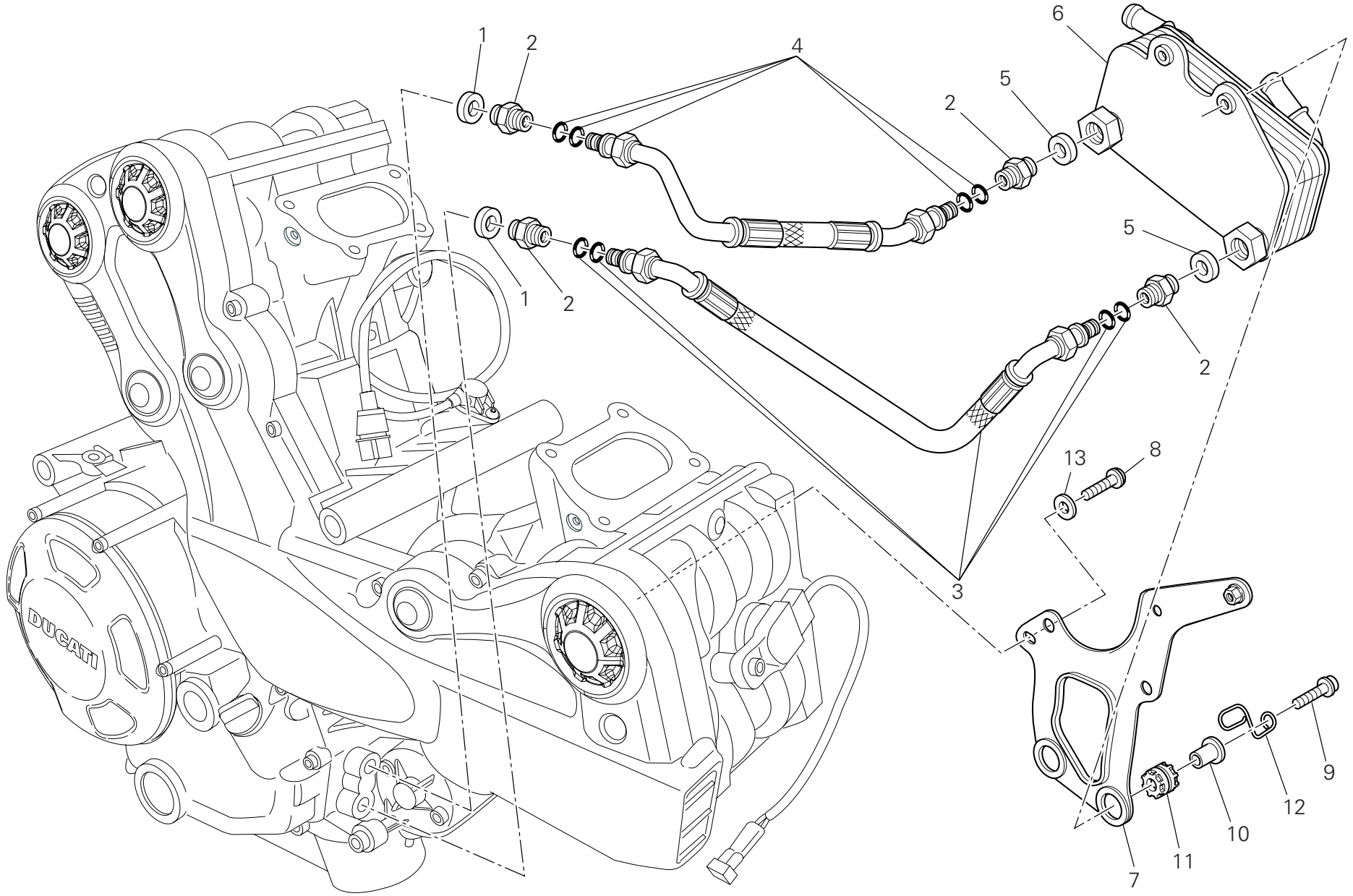

DRAWING 016 Heat exchanger

NOTES NO.	CODE NO.	DESCRIPTION	VALIDITY	Q.TY
1	787.1.011.1A	Aluminium gasket th.2		2
2	815.1.022.1A	Nipple		4
3	549.1.090.1A	Oil delivery pipe		1
4	549.1.091.1A	Oil return pipe		1
5	420.2.006.4A	Aluminium gasket		2
6	547.1.001.1A	Heat exchanger		1
7	830.1.530.1A	Bracket		1
8	772.1.089.3B	Screw		2
9	771.5.663.8B	Screw		2
10	716.1.003.1A	Spacer		2
11	764.1.022.1A	Vibration damper pad		2
12	881.1.058.1A	Cable guide		1
13	852.1.176.1A	Washer		2

NOTES NO.	CODE NO.	DESCRIPTION	VALIDITY	Q.TY

CATALOGUE No: 915.1.290.1B
ISSUED: 04 - 09

DRAWING 017 Throttle body

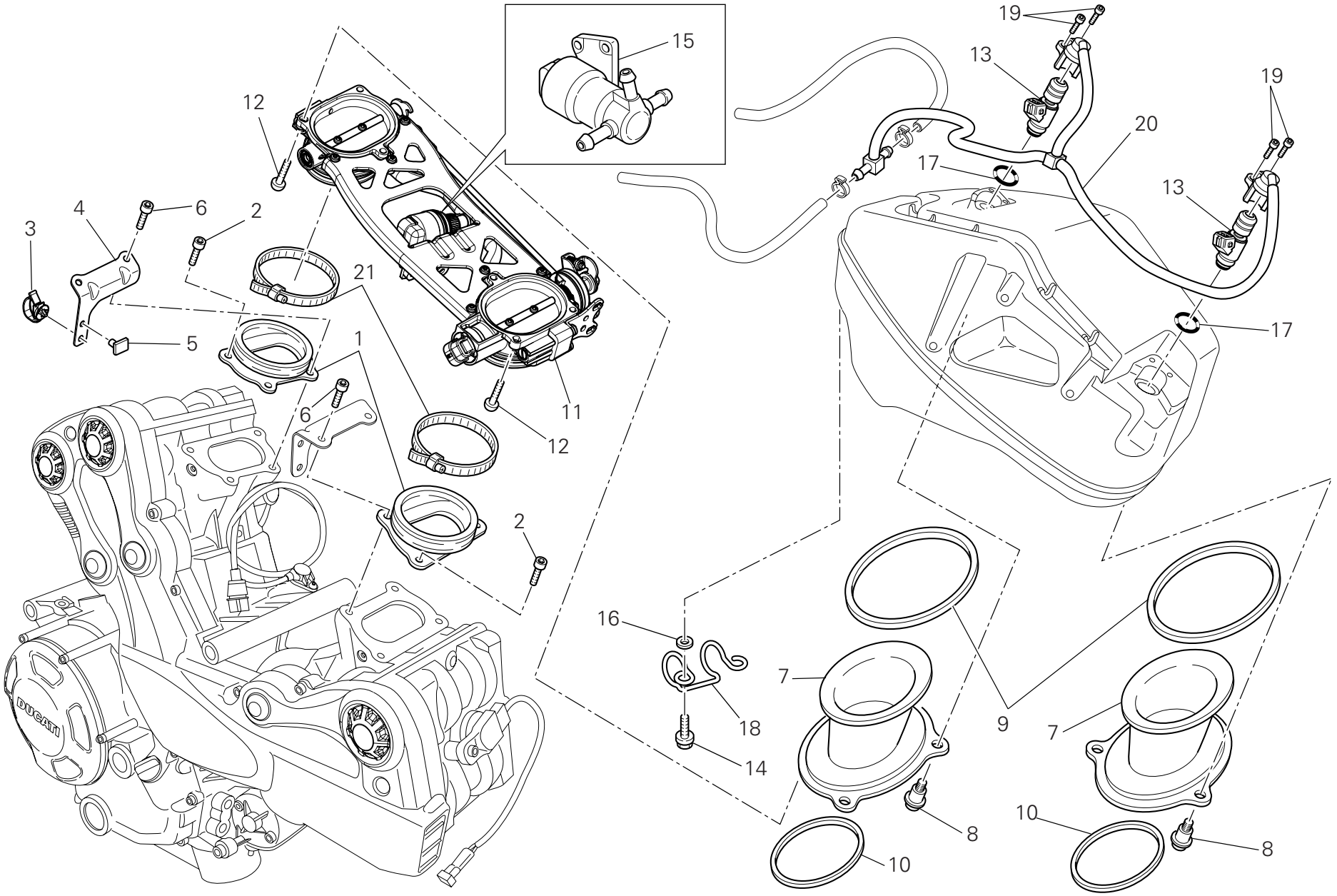

DRAWING 017 Throttle body

NOTES NO.	CODE NO.	DESCRIPTION	VALIDITY	Q.TY
1	140.1.048.1B	Intake manifold		2
2	771.5.065.8B	Screw		4
3	758.4.017.1A	Clamp		2
4	827.1.543.1A	Cable keep plate		1
5	850.4.043.1A	Quik fastening		1
6	771.1.233.1A	Screw		4
7	135.1.023.2A	Intake duct		2
8	772.1.085.2A	Special screw		6
9	788.1.096.2A	Gasket		2
10	788.1.097.2A	Gasket		2
11	282.4.079.1B	Complete throttle body		1
12	775.1.017.1C	Screw		6
13	280.4.016.1A	Injector		2
14	772.1.110.1A	Screw		2
15	283.4.024.1A	Stepper motor		1
16	852.4.013.1A	Washer		2
17	886.4.089.1A	O-ring		2
18	758.1.039.2A	Hose guide		1
19	773.1.005.1A	Screw		4
20	590.2.026.1A	Complete pipe set		1
21	741.4.189.1A	Clamp		2

NOTES NO.	CODE NO.	DESCRIPTION	VALIDITY	Q.TY

CATALOGUE No: 915.1.290.1B
ISSUED: 04 - 09

DRAWING 018 Battery support

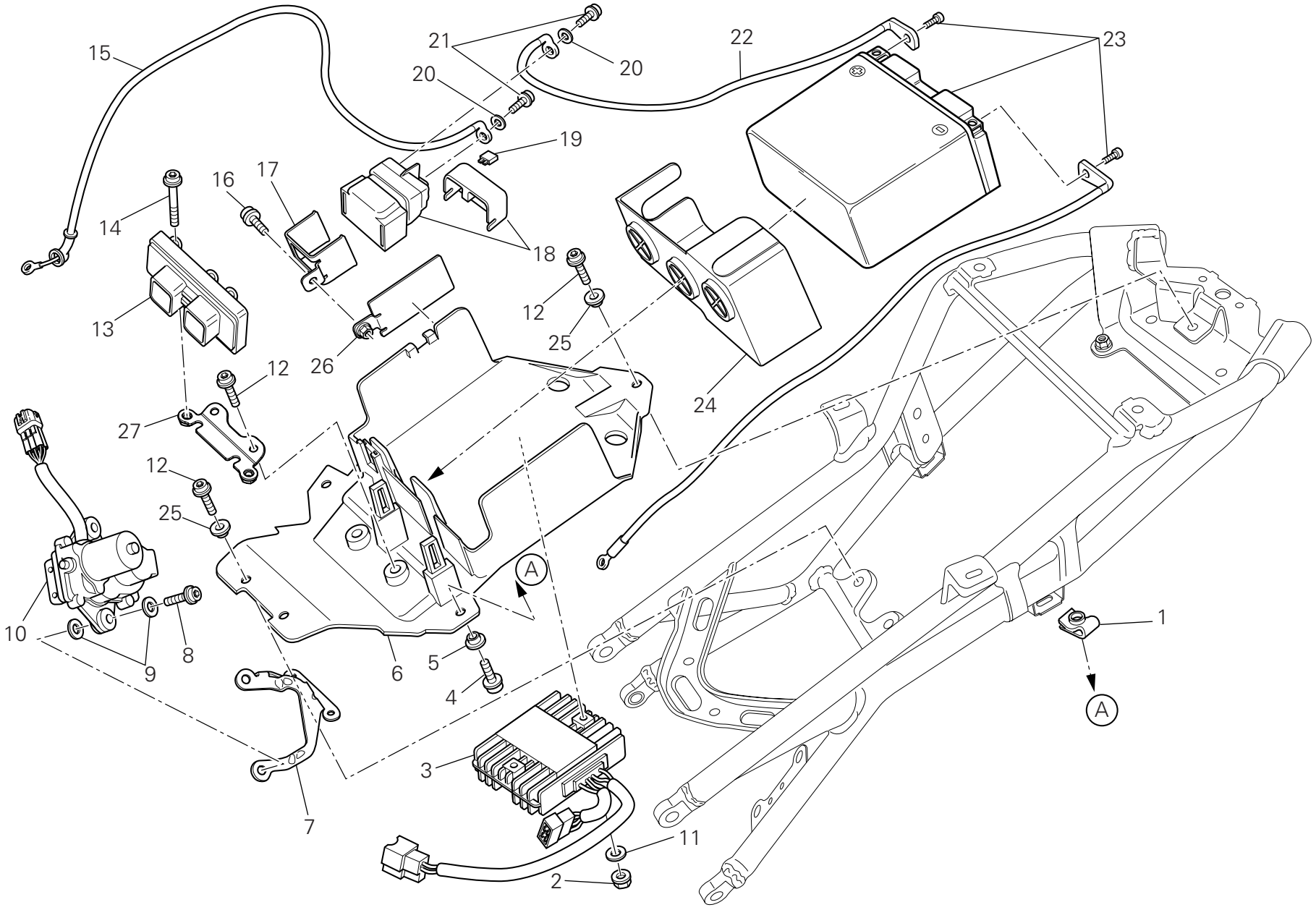

DRAWING 018 Battery support

NOTES NO.	CODE NO.	DESCRIPTION	VALIDITY	Q.TY
1	850.4.055.1A	Quik fastening		2
2	750.5.001.1B	Nut		2
3	540.4.019.1A	Regulator		1
4	771.5.639.8B	Screw		2
5	716.1.407.1A	Spacer		2
6	829.1.985.2A	Battery box mount		1
7	830.1.544.1A	Bracket		1
8	771.5.668.8B	Screw		2
9	852.5.009.1A	Washer		4
10	593.4.030.1A	Exhaust valve engine		1
11	852.1.160.1B	Washer		2
12	771.1.369.1A	Screw		5
USA 13	286.4.186.1C	Injection control unit		1
CDN 13	286.4.186.1D	Injection control unit		1
14	771.5.672.8B	Screw		2
15	514.1.062.1A	Solenoid starter - starter motor cable		1
16	772.1.046.1B	Screw		1
17	830.1.549.1A	Plate		1
18	397.4.007.1A	Remote switch		1
19	389.4.023.1A	Fuse 30A		2
20	853.5.010.1A	Spring washer		2
21	771.5.662.8B	Screw		2
22	514.1.063.1A	Battery - solenoid starter cable		1
23	395.2.013.1C	Battery		1
24	866.1.098.1A	Battery carpet		1
25	716.1.401.1A	Spacer		3
26	830.1.550.1A	Plate		1

NOTES NO.	CODE NO.	DESCRIPTION	VALIDITY	Q.TY
27	830.1.556.1A	Holder		1

CATALOGUE No: 915.1.290.1B
ISSUED: 04 - 09

DRAWING 018a Electrical system

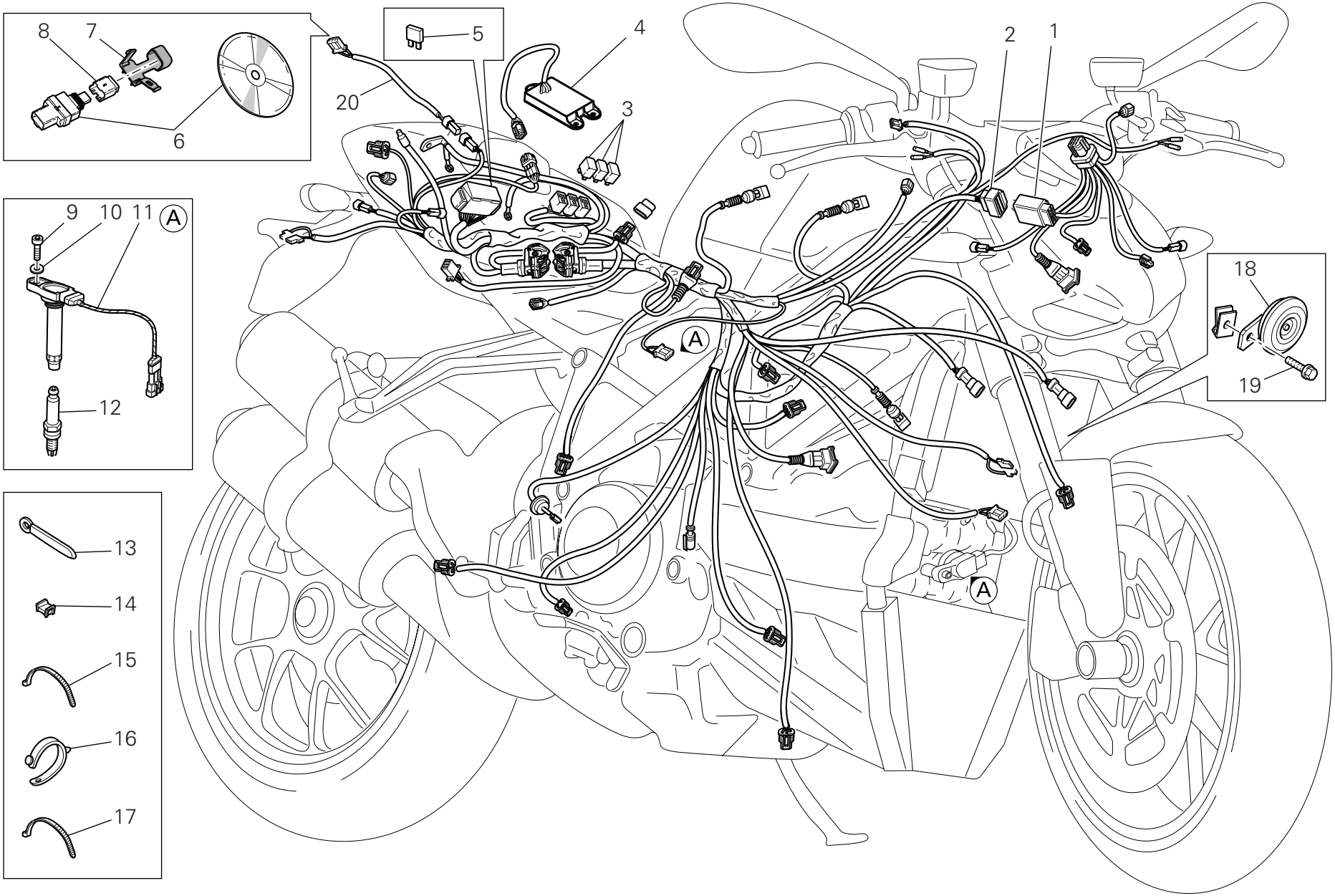

DRAWING 018a Electrical system

NOTES NO.	CODE NO.	DESCRIPTION	VALIDITY	Q.TY
1	510.1.694.1B	Electric wiring		1
2	510.1.662.1B	Electric wiring		1
3	541.4.010.1A	Relay		3
4	286.1.117.1E	DTC unit		1
5	389.4.019.1A	Fuse 5A		2
5	389.4.020.1A	Fuse 10A		1
5	389.4.021.1A	Fuse 15A		1
5	389.4.022.1A	Fuse 20A		1
5	389.4.024.1A	Fuse 7.5A		1
6	286.2.040.1B	Data acquisition kit		1
7	741.1.040.1A	Clamp		1
8	872.1.053.1A	Cap (DDA)		1
9	771.5.066.8B	Screw		2
10	852.1.176.1A	Washer		2
11	380.1.014.5B	Coil		2
12	670.4.038.1A	Spark plug		2
13	741.4.193.1A	Clamp		1
14	850.4.067.1A	Clamp		8
15	741.4.038.1A	Hose guide		7
16	8000.53724	Hose guide		4
17	0691.91.030	Hose guide		6
18	516.4.004.2B	Horn		1
19	772.1.050.1C	Screw		1
20	510.1.570.1A	Data acquisition cable		1

NOTES NO.	CODE NO.	DESCRIPTION	VALIDITY	Q.TY

CATALOGUE No: 915.1.290.1B
ISSUED: 04 - 09

DRAWING 019 Exhaust system

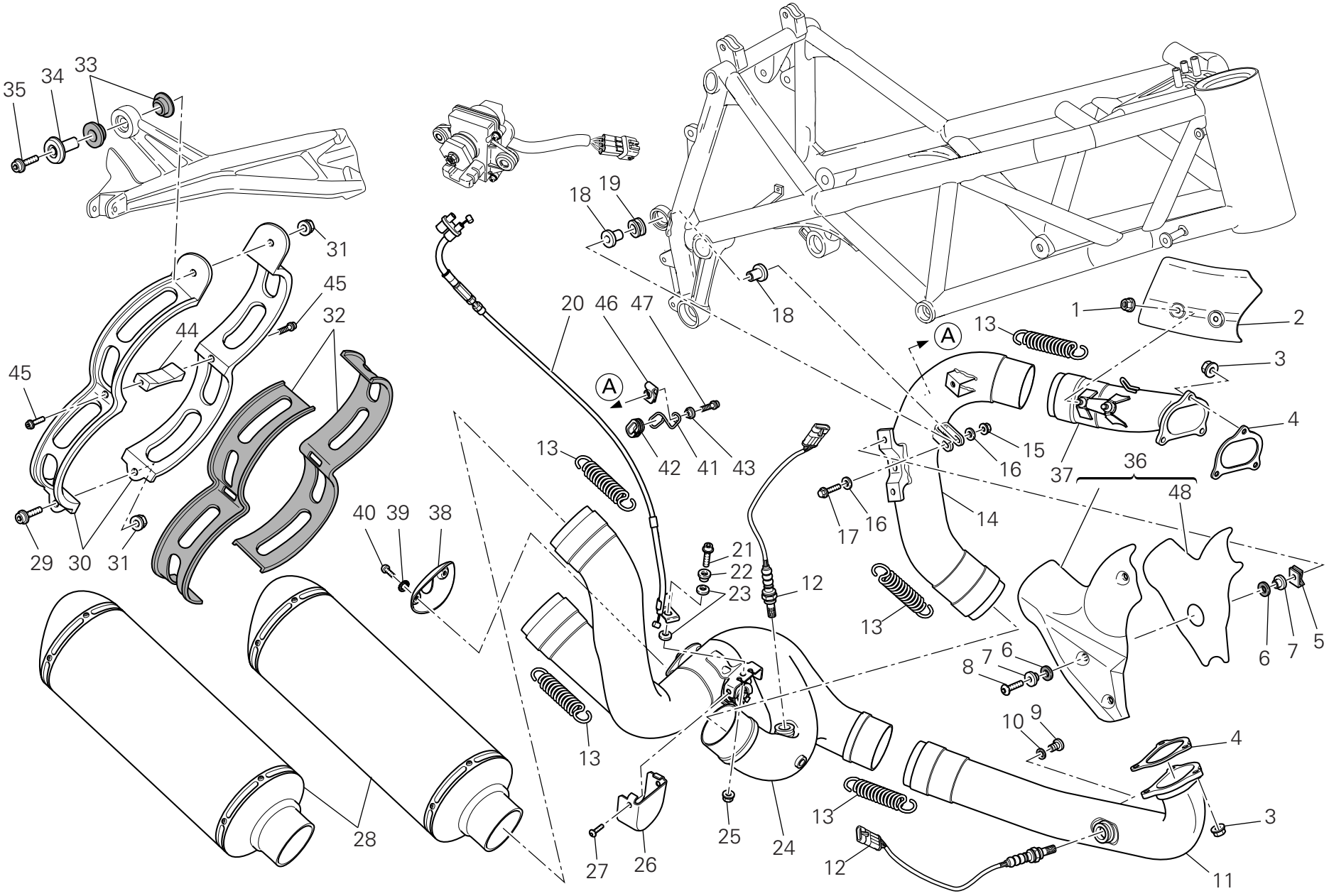

DRAWING 019 Exhaust system

NOTES NO.	CODE NO.	DESCRIPTION	VALIDITY	Q.TY
1	748.1.036.1A	Nut		2
2	460.1.286.1B	Heat guard		1
3	748.1.024.1A	Nut		6
4	790.1.015.1A	Exhaust gasket		2
5	850.4.055.1A	Quik fastening		3
6	852.1.072.1A	Washer		6
7	716.1.407.1A	Spacer		6
8	772.1.089.3B	Screw		3
9	780.1.007.1A	Cap		2
10	852.5.024.1A	Gasket th.1		2
11	570.1.259.1A	Horizontal head exhaust pipe		1
12	552.1.111.1A	Lambda sensor		2
13	799.1.263.2A	Spring		5
14	571.1.260.2A	Vertical head exhaust pipe		1
15	749.4.031.1A	Nut		1
16	852.1.186.1A	Washer		2
17	772.5.038.1AB	Screw		1
18	716.1.414.1A	Spacer		2
19	764.1.064.1A	Vibration damper pad		1
20	732.2.027.1A	Cables unit		1
21	771.5.640.8B	Screw		1
22	716.1.144.1A	Spacer		1
23	799.4.009.1A	Spring washer		2
24	570.1.274.1B	Centre exhaust pipe		1
25	748.1.035.1B	Nut		1
26	460.1.293.1A	Protection		1
27	775.5.024.1A	Screw		2
28	573.1.116.1B	Silencer		2
29	771.5.725.8B	Screw		1
30	741.1.047.1A	Clamp		2
31	749.4.112.8B	Nut		2
32	788.1.083.1A	Clamp gasket		2
33	764.1.001.1A	Rubber pad		2
34	713.1.436.1A	Bush		1
35	773.5.506.8B	Screw		1
36	460.2.359.1A	Heat guard		1
37	160.1.367.4A	Exhaust manifold (vertical)		1
38	460.1.275.1A	Protection		1
39	462.4.046.1A	Spring washer		2
40	775.5.016.1A	Screw		2
41	881.1.058.1A	Cable guide		1
42	764.1.105.1A	Rubber pad		1
43	716.1.412.1A	Spacer		1
44	741.1.048.1A	Spacer		1
45	771.5.639.8B	Screw		2
46	850.4.038.1A	Quik fastening		1
47	771.5.663.8B	Screw		1
48	460.1.405.1A	Heat-reflecting protection		1

CATALOGUE No: 915.1.290.1B
ISSUED: 04 - 09

DRAWING 020 Headlight & instr. panel

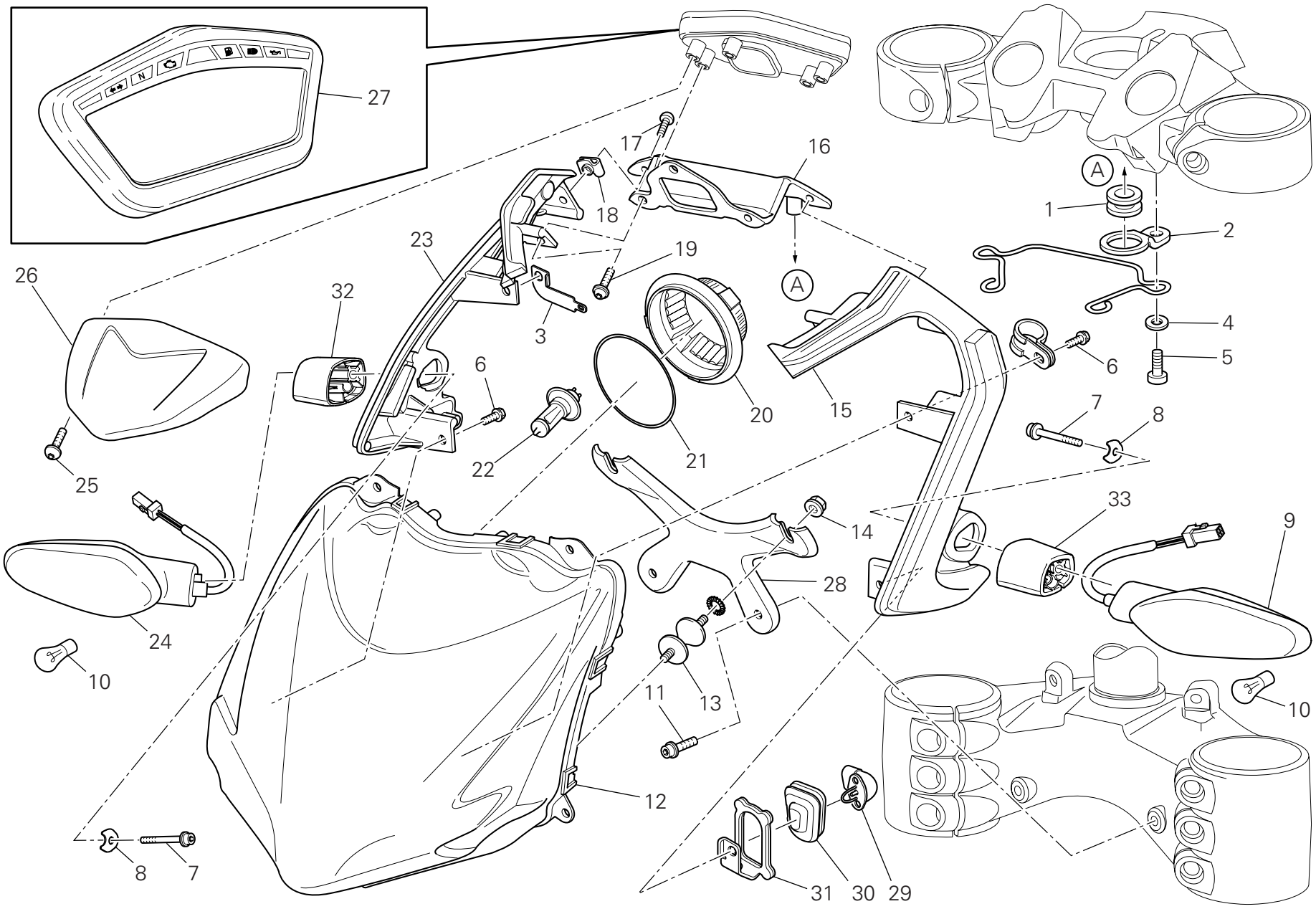

DRAWING 020 Headlight & instr. panel

NOTES NO.	CODE NO.	DESCRIPTION	VALIDITY	Q.TY
1	764.1.064.1A	Vibration damper pad		2
2	830.1.416.1A	Headlight holder (upper)		2
3	827.1.544.1A	Connector holder		1
4	852.1.176.1A	Washer		2
5	771.1.039.1A	Screw		2
6	772.1.061.1A	Screw		4
7	771.5.651.8B	Screw		2
8	827.1.493.1A	Plate		2
9	530.1.022.4A	Turn indicator (front) (L.H.)		1
10	390.4.021.1A	Bulb 12V-10W RY10W		2
11	771.5.663.8B	Screw		2
12	520.1.018.1A	Headlight (front)		1
13	700.1.048.1B	Vibration damper		2
14	750.5.001.1B	Nut		2
15	829.1.982.1A	Headlight holder (L.H.)		1
16	829.1.974.1A	Headlight holder (centre)		1
17	775.1.033.1A	Screw		2
18	850.4.047.1A	Quik fastening		2
19	774.4.004.1A	Screw		3
20	390.4.026.1A	Cap		1
21	390.4.027.1A	Gasket		1
22	390.4.024.1A	Bulb		1
23	829.1.983.1A	Headlight holder (R.H.)		1
24	530.1.023.4A	Turn indicator (front) (R.H.)		1
25	775.5.001.3C	Screw		2
26	247.1.335.1A	Instrument panel cover		1
27	406.1.072.4A	Complete instrument panel		1
28	830.1.411.1A	Headlight holder (bottom)		1
29	552.4.012.1A	Air temperature sensor		1
30	764.1.097.1A	Rubber pad		1
31	827.1.538.1A	Holder sensor		1
32	713.1.458.1A	Spacer (R.H.)		1
33	713.1.459.1A	Spacer (L.H.)		1

CATALOGUE No: 915.1.290.1B
ISSUED: 04 - 09

DRAWING 021 Handlebar and controls

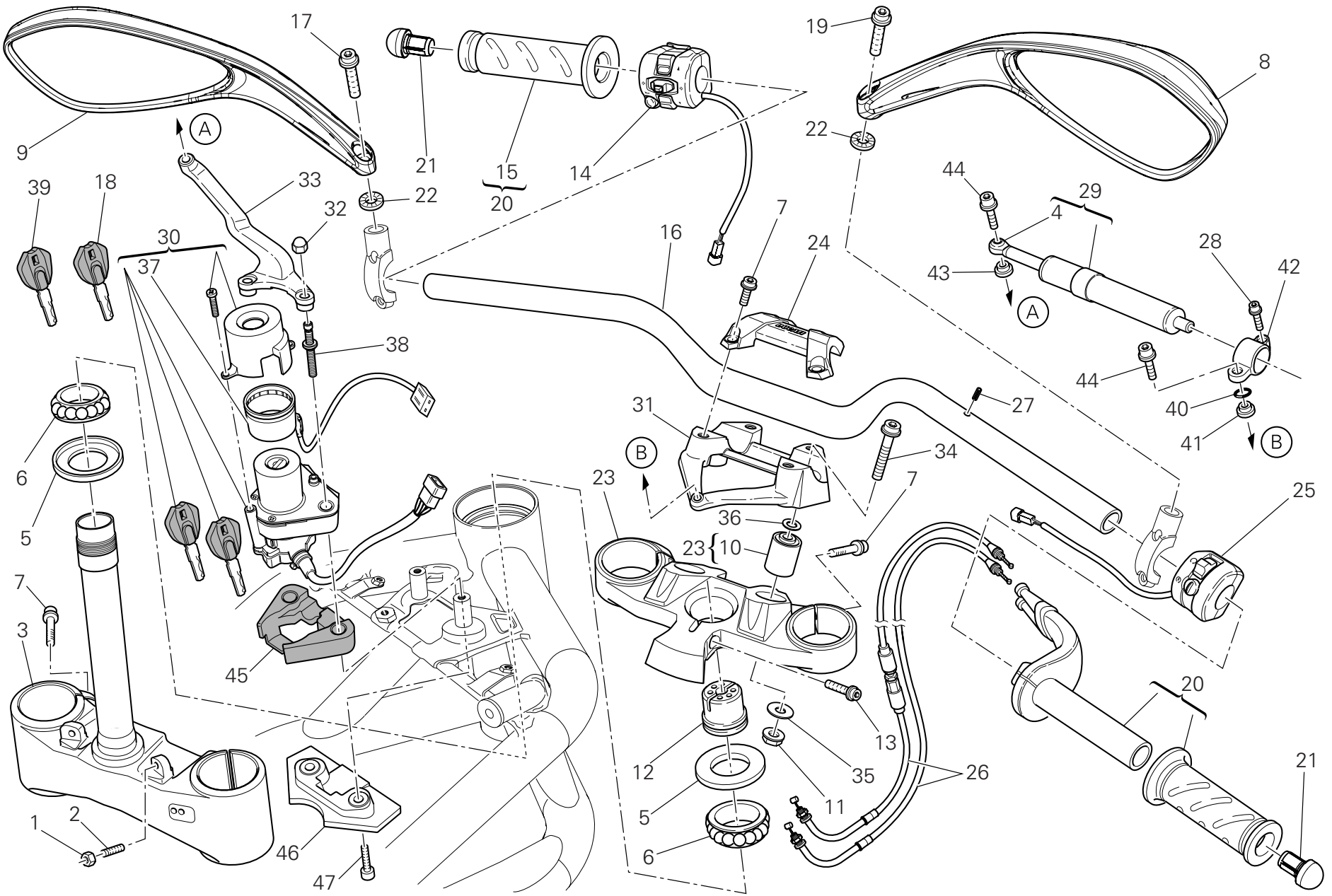

DRAWING 021 Handlebar and controls

NOTES NO.	CODE NO.	DESCRIPTION	VALIDITY	Q.TY
1	747.5.003.1A	Nut		2
2	779.1.298.1A	Special screw		2
3	342.2.057.1A	Steering head base with pin		1
4	848.2.002.1A	Joint		1
5	930.1.004.1A	Seal ring		2
6	702.4.004.1A	Bearing		2
7	771.5.725.8B	Screw		12
8	523.4.022.2A	Rear-view mirror (R.H.)		1
9	523.4.023.2A	Rear-view mirror (L.H.)		1
10	700.1.054.1A	Spacer		2
11	748.4.024.1AB	Nut		2
12	703.1.013.1A	Ring nut		1
13	771.5.727.8B	Screw		1
14	651.1.011.1C	Switch (L.H.)		1
15	361.1.002.1A	Grip		2
16	360.1.103.1A	Handlebar		1
17	771.1.374.1A	Screw		1
18	598.4.029.1A	Wrench without Transponder		1
19	771.1.373.1A	Screw (L.H.)		1
20	654.2.016.1A	Throttle control		1
21	872.1.058.1A	Cap		2
22	851.4.006.1A	Spring washer		2
23	341.2.071.1A	Steering head		1
24	360.1.102.1A	Single U-bolt (upper)		1
25	650.1.009.1D	Switch (R.H.)		1
26	656.2.092.1A	Cables unit		1
27	860.5.017.1A	Spring pin		1
28	771.1.039.1A	Screw		1
29	364.2.009.1A	Steering damper		1
30	652.4.014.1B	Switch		1
31	360.1.100.1A	Single U-bolt (bottom)		1
32	749.4.002.1A	Nut		2
33	830.1.527.1A	Holder		1
34	771.5.940.8B	Screw		2
35	852.1.049.1B	Washer		2
36	852.5.040.1A	Washer		2
37	518.4.005.1B	Antenna		1
38	779.1.591.1A	Special screw		2
39	598.4.028.1A	Wrench with Transponder		1
40	886.5.014.1A	O-ring		1
41	713.1.210.1A	Spacer		1
42	808.1.118.1A	Clamp		1
43	716.1.412.1A	Spacer		1
44	771.1.046.1A	Screw		2
45	866.1.116.1A	Pad		1
46	700.1.063.1A	Vibration damper		1
47	773.1.002.1A	Screw		2

CATALOGUE No: 915.1.290.1B
ISSUED: 04 - 09

DRAWING 021a Front forks

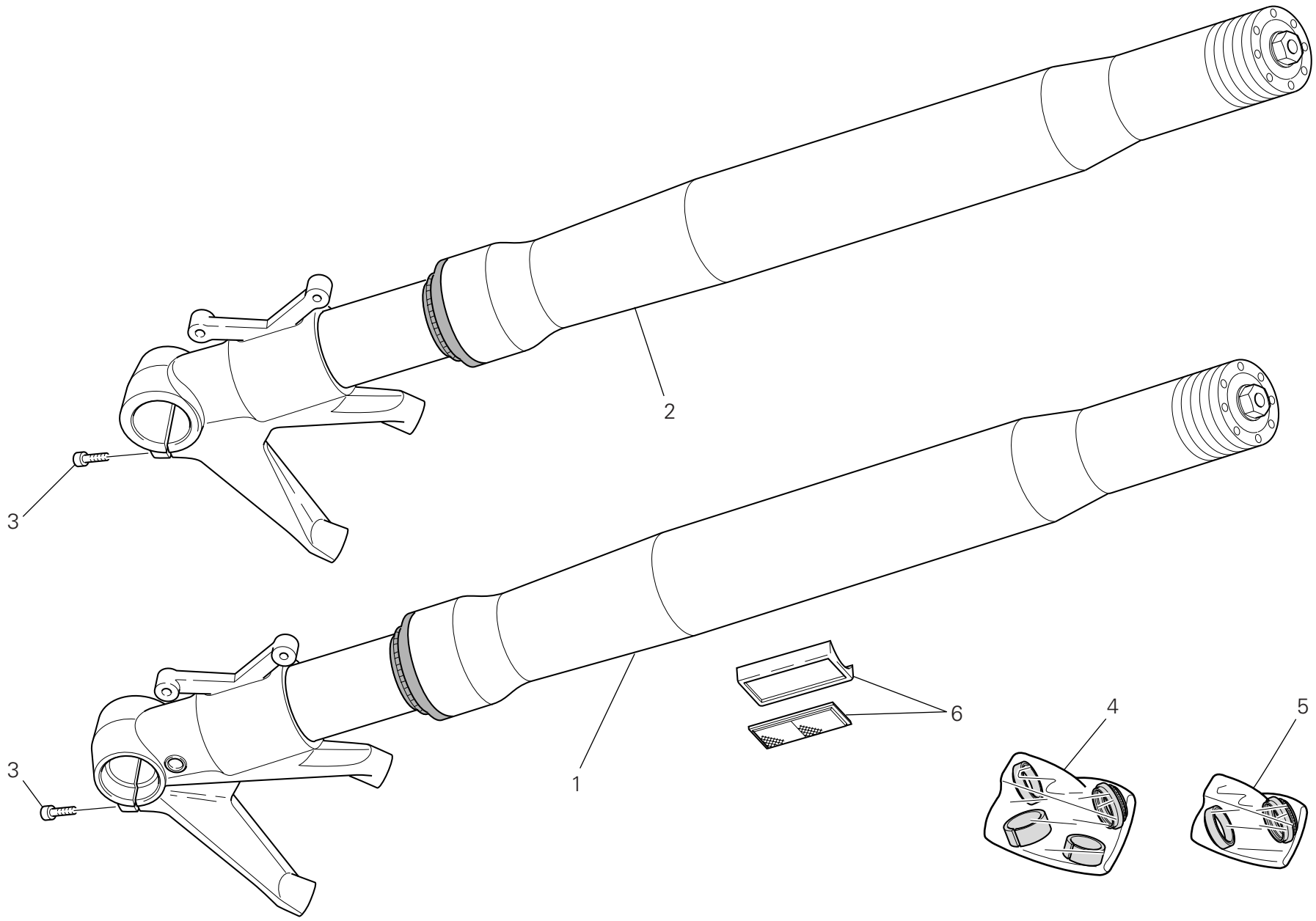

DRAWING 021a Front forks

NOTES NO.	CODE NO.	DESCRIPTION	VALIDITY	Q.TY
1	344.2.017.1B	L.H. fork leg assembly (OHLINS)		1
2	345.2.017.1B	R.H. fork leg assembly (OHLINS)		1
3	771.5.727.8B	Screw		4
4	349.2.039.1A	Overhaul kit (OHLINS)		2
5	349.2.040.1A	Seat kit (OHLINS)		2
6	529.1.001.2A	Cat's eye (AMBER)		2

NOTES NO.	CODE NO.	DESCRIPTION	VALIDITY	Q.TY

CATALOGUE No: 915.1.290.1B
ISSUED: 04 - 09

DRAWING 022 Frame

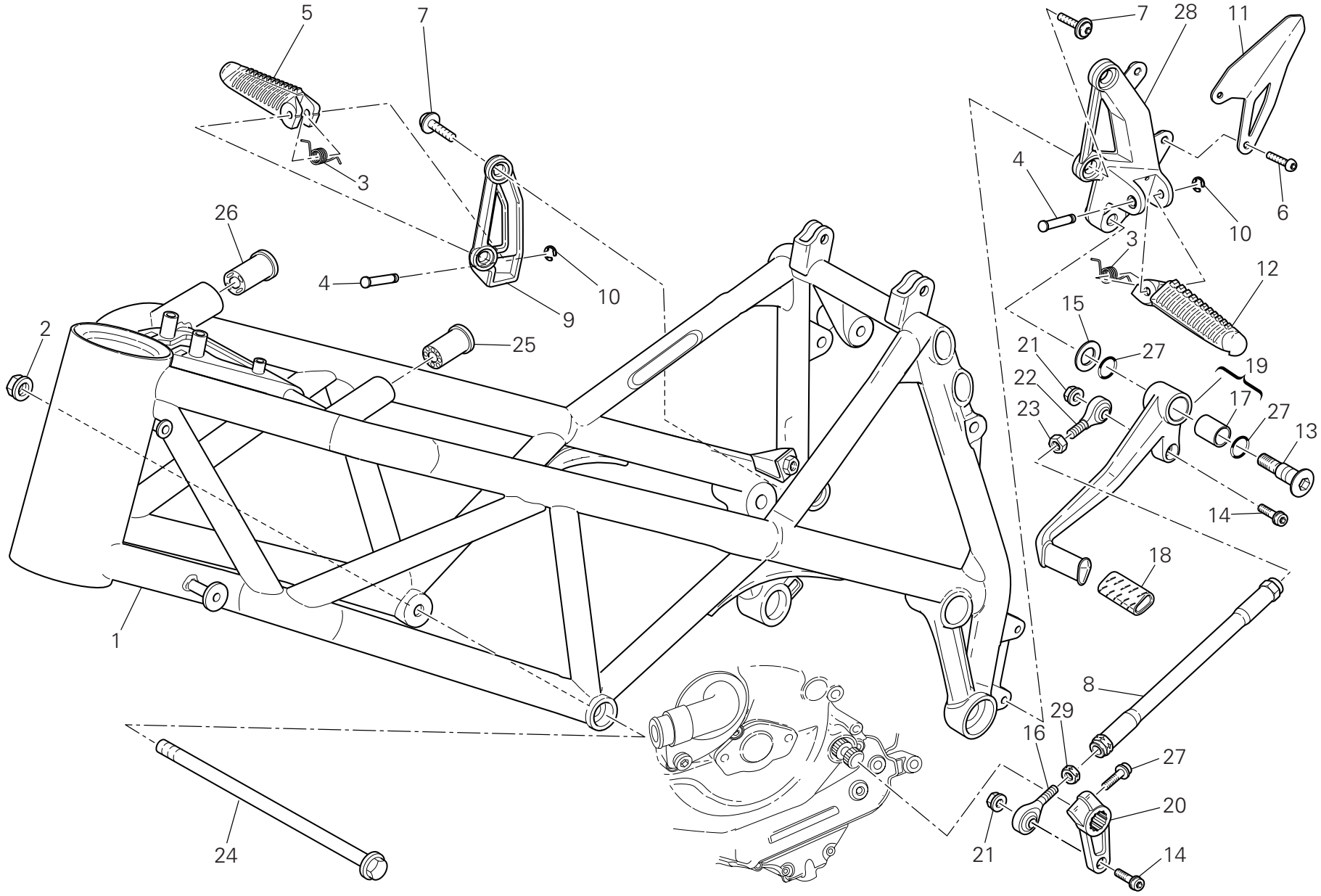

DRAWING 022 Frame

NOTES NO.	CODE NO.	DESCRIPTION	VALIDITY	Q.TY
1	470.1.199.1AB	Frame (BRONZE)		1
2	748.4.002.1A	Nut		2
3	799.1.166.1A	Spring		2
4	821.1.051.1AB	Pin		2
5	464.1.056.1A	Foot peg (front) (R.H.)		1
6	775.1.051.1B	Screw		2
7	772.1.077.2AB	Screw		4
8	117.1.088.2A	Gearbox transmission rod		1
9	824.1.155.1A	Foot peg holder plate (front) (R.H.)		1
10	884.5.003.1A	Ring		2
11	460.1.331.1A	Heel guard (front) (L.H.)		1
12	464.1.055.1A	Foot peg (front) (L.H.)		1
13	821.1.170.1A	Pin		1
14	771.5.667.8B	Screw		3
15	852.1.151.1A	Washer		1
16	848.5.001.1A	Ball joint		1
17	712.1.034.1A	Bush		1
18	764.1.011.2A	Rubber pad		1
19	456.1.203.1A	Gearchange lever		1
20	456.1.046.1B	Gearchange control lever		1
21	749.4.004.1A	Nut		2
22	848.5.002.1A	Ball joint		1
23	747.5.010.1A	Nut		1
24	779.1.484.2B	Special screw		2
25	764.1.051.1A	Rubber pad		1
26	764.1.050.1A	Rubber pad		1
27	886.4.116.1A	O-ring		2
28	824.1.154.1A	Foot peg holder plate (front) (L.H.)		1
29	747.5.001.1AB	Nut (L.H.)		1

CATALOGUE No: 915.1.290.1B
ISSUED: 04 - 09

DRAWING 022a Stand

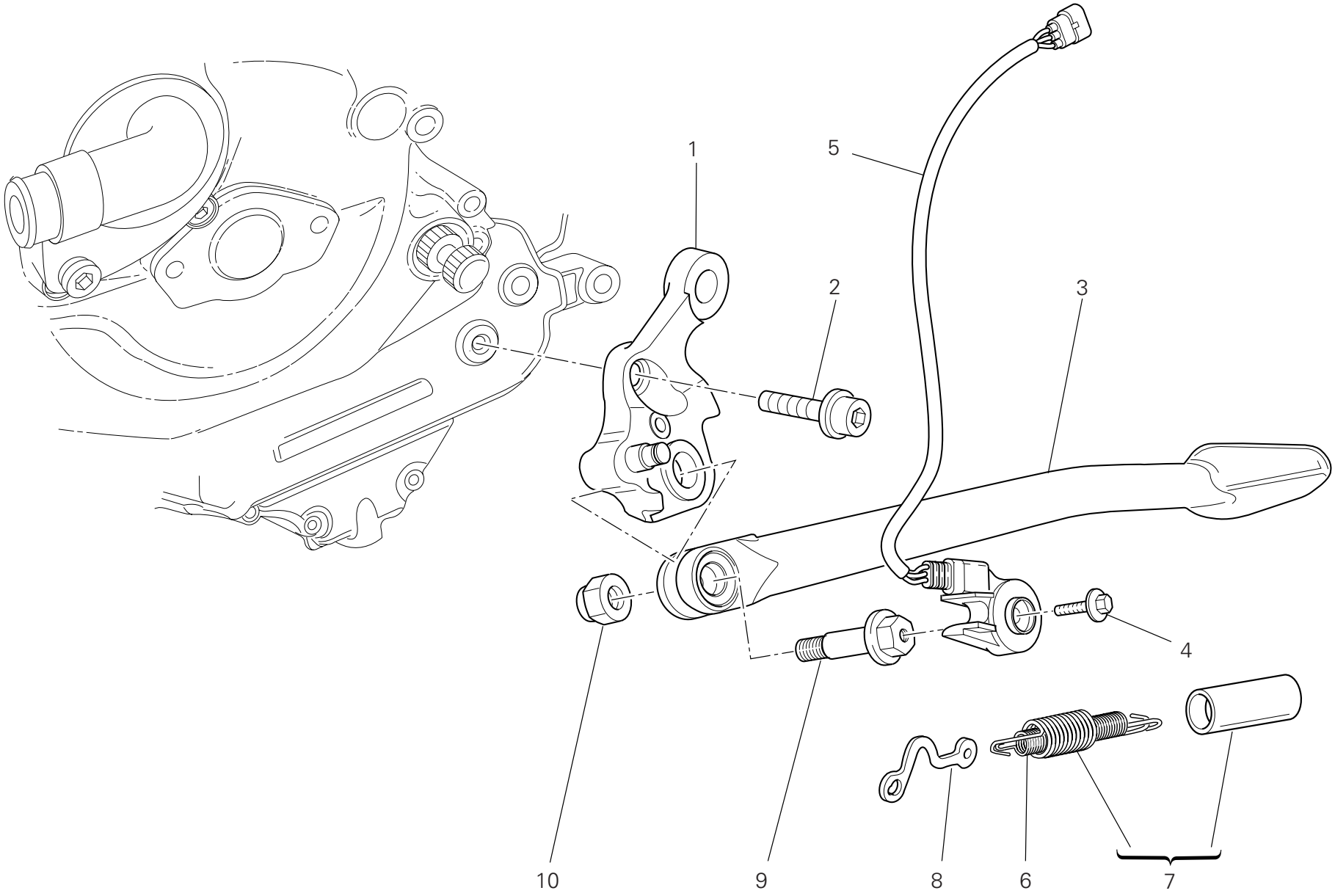

DRAWING 022a Stand

NOTES NO.	CODE NO.	DESCRIPTION	VALIDITY	Q.TY
1	556.2.045.1A	Plate		1
2	771.1.043.1A	Screw		2
3	556.1.046.2AB	Side stand (BLACK)		1
4	779.4.005.2A	Screw		1
5	539.1.023.3A	Switch		1
6	799.1.158.1A	Inner spring		1
7	799.2.159.1A	Complete spring		1
8	829.1.260.2A	Plate		1
9	821.1.103.2A	Pivot		1
10	750.1.048.1A	Nut		1

NOTES NO.	CODE NO.	DESCRIPTION	VALIDITY	Q.TY

CATALOGUE No: 915.1.290.1B
ISSUED: 04 - 09

DRAWING 023 Clutch control

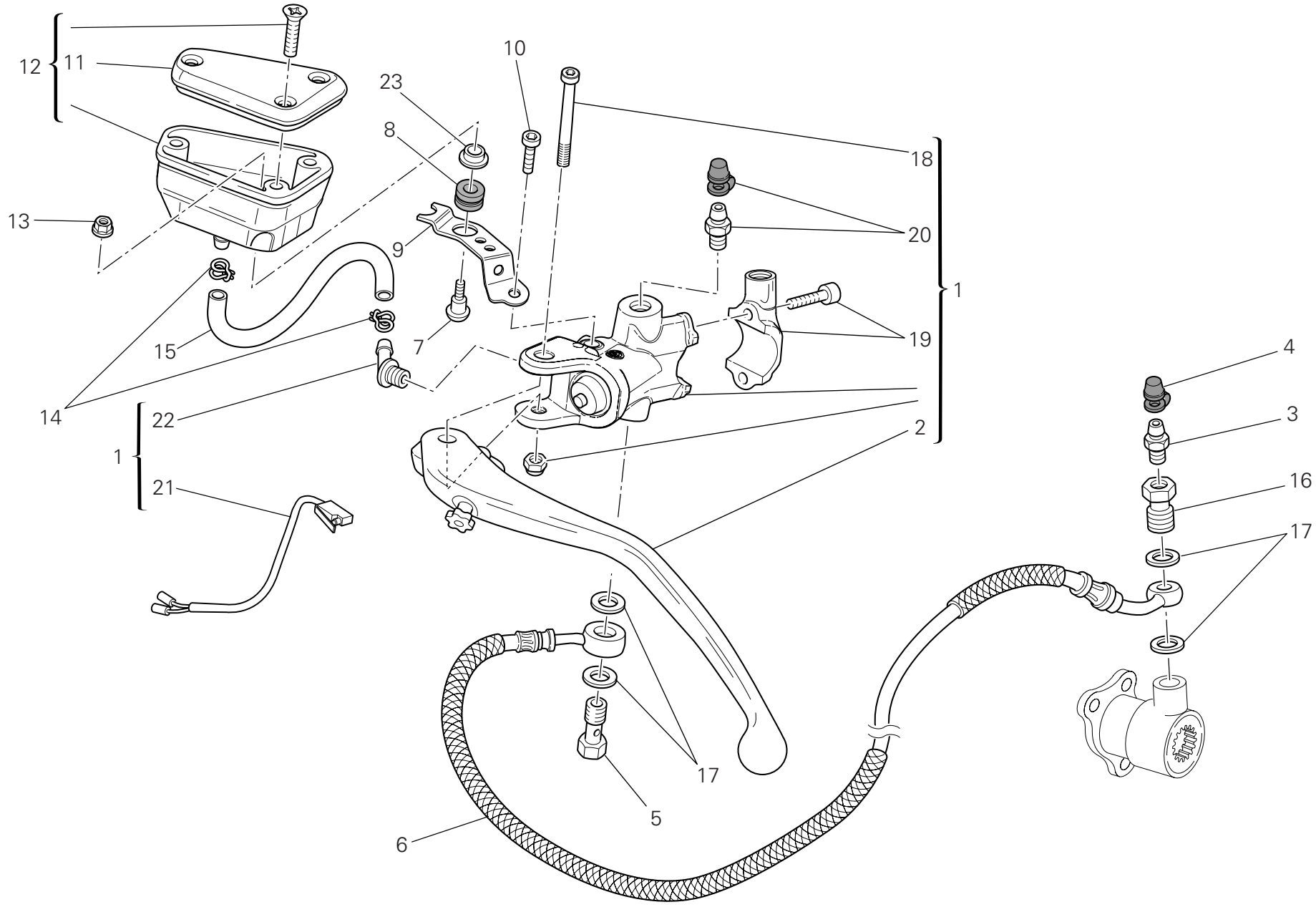

DRAWING 023 Clutch control

NOTES NO.	CODE NO.	DESCRIPTION	VALIDITY	Q.TY
1	630.4.048.1A	Clutch drive pump		1
2	631.4.034.1A	Clutch control lever		1
3	187.1.002.1A	Bleed		1
4	612.4.005.1A	Dust seal		1
5	779.1.082.1AB	Special screw		1
6	632.1.049.1B	Clutch control pipe (METAL PLAITED)		1
7	779.1.092.1A	Screw		1
8	0370.72.020	Vibration damper pad		1
9	829.1.978.1A	Bracket		1
10	773.5.062.3B	Screw		1
11	893.4.008.1A	Cap		1
12	585.4.010.1A	Complete oil tank		1
13	8000.56443	Nut		1
14	741.4.043.1A	Hose guide		2
15	877.1.138.1A	Tube		1
16	779.1.366.1AB	Special screw		1
17	852.5.024.1A	Gasket th.1		4
18	626.4.056.1A	Pin		1
19	626.4.066.1A	Spare bracket		1
20	631.4.028.1A	Spare bleed union		1
21	539.4.036.1A	Microswitch		1
22	631.4.008.1A	Spare union		1
23	852.1.250.1A	Spacer		1

NOTES NO.	CODE NO.	DESCRIPTION	VALIDITY	Q.TY

CATALOGUE No: 915.1.290.1B
ISSUED: 04 - 09

DRAWING 024 Front brake

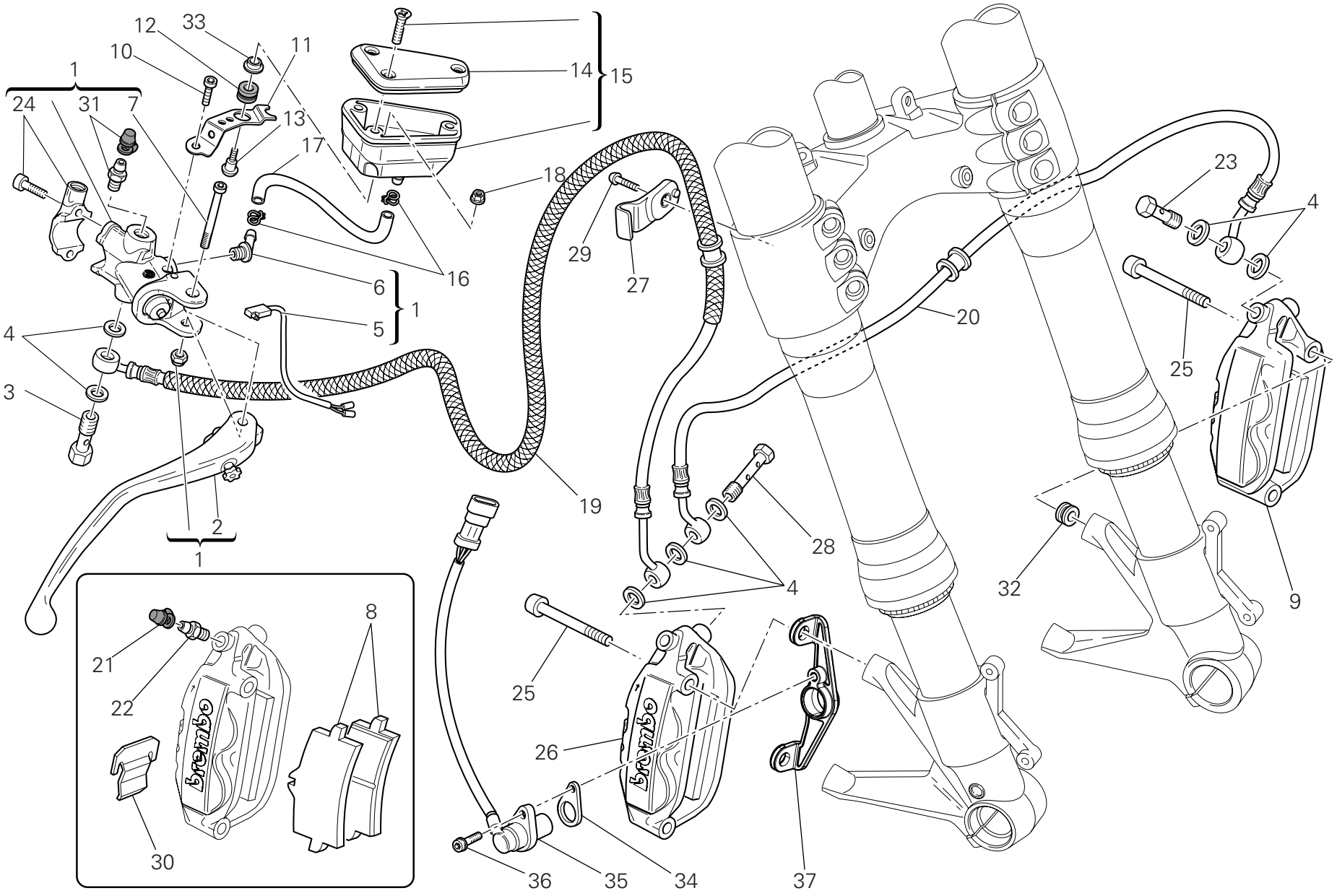

DRAWING 024 Front brake

NOTES NO.	CODE NO.	DESCRIPTION	VALIDITY	Q.TY
1	624.4.057.1A	Front brake pump		1
2	631.4.033.1A	Brake control lever		1
3	779.1.415.1A	Special screw		1
4	852.5.024.1A	Gasket th.1		7
5	539.4.035.1A	Microswitch		1
6	631.4.008.1A	Spare union		1
7	626.4.056.1A	Pin		1
8	613.4.090.1A	Pads pair		2
9	610.4.090.1C	Brake caliper (L.H.)		1
10	773.5.062.3B	Screw		1
11	829.1.979.1A	Bracket		1
12	0370.72.020	Vibration damper pad		1
13	779.1.092.1A	Screw		1
14	893.4.007.1A	Tank cap		1
15	585.4.011.1A	Complete oil tank		1
16	741.4.043.1A	Hose guide		2
17	877.1.138.1A	Tube		1
18	8000.56443	Nut		1
19	618.4.095.1B	Caliper pump pipe		1
20	618.4.075.1B	Front brake line		1
21	612.4.005.1A	Dust seal		2
22	187.1.002.1A	Bleed		2
23	779.1.366.1AB	Special screw		1
24	626.4.067.1A	Spare bracket		1
25	779.1.331.1D	Screw		4
26	610.4.091.1C	Brake caliper (R.H.)		1
27	830.1.479.1A	Bracket		1
28	779.1.309.1AB	Special screw		1
29	775.1.054.1A	Screw		1
30	612.4.037.1A	Spring		2
31	631.4.028.1A	Spare bleed union		2
32	713.1.364.1A	Spacer		2
33	852.1.250.1A	Spacer		1
34	713.1.192.1A	Spacer		1
35	552.4.037.2E	Speed sensor		1
36	771.5.665.8B	Screw		1
37	830.1.477.1A	Bracket		1

CATALOGUE No: 915.1.290.1B
ISSUED: 04 - 09

DRAWING 025 Rear brake

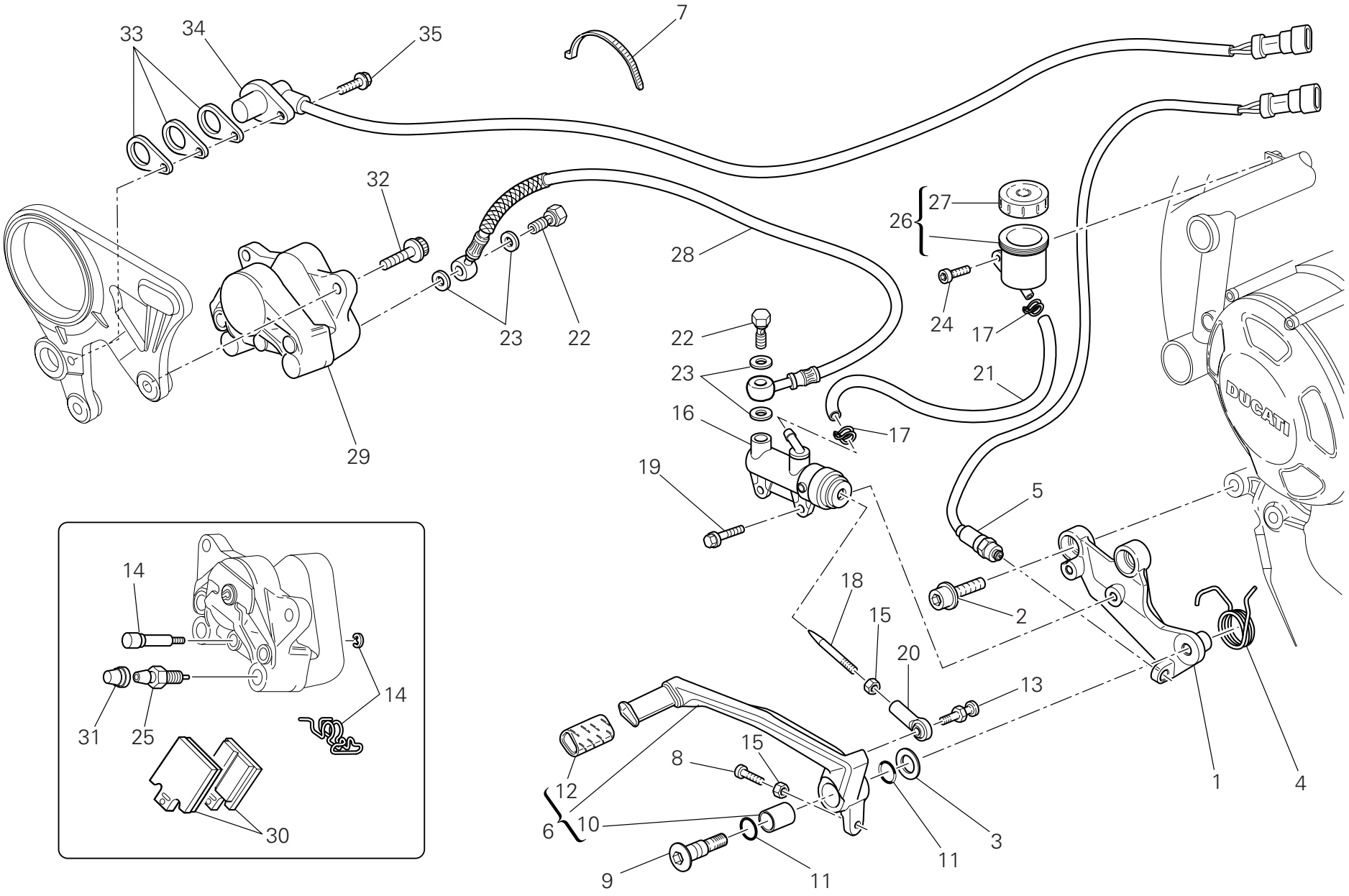

DRAWING 025 Rear brake

NOTES NO.	CODE NO.	DESCRIPTION	VALIDITY	Q.TY
1	829.1.984.1A	Plate		1
2	771.1.043.1A	Screw		2
3	852.1.151.1A	Washer		1
4	799.1.256.1A	Spring		1
5	539.4.003.1B	Switch		1
6	457.1.047.1A	Brake control lever (rear)		1
7	741.4.038.1A	Hose guide		3
8	779.1.237.1B	Adjusting screw		1
9	821.1.170.1A	Pin		1
10	712.1.034.1A	Bush		1
11	886.4.116.1A	O-ring		2
12	764.1.011.2A	Rubber pad		1
13	821.1.273.1A	Pin		1
14	612.4.016.1A	Spare pins and spring		1
15	747.5.003.1A	Nut		2
16	625.4.018.1B	Rear brake pump		1
17	741.4.043.1A	Hose guide		2
18	117.1.044.1A	Adjuster rod		1
19	772.1.063.1A	Screw		1
20	184.1.010.2A	Ball joint		1
21	877.1.139.1A	Tube		1
22	779.1.366.1AB	Special screw		2
23	852.5.024.1A	Gasket th.1		4
24	773.5.062.8B	Screw		1
25	631.4.016.1A	Bleed		1
26	585.4.001.1A	Complete oil tank		1
27	893.4.005.1A	Cap		1

NOTES NO.	CODE NO.	DESCRIPTION	VALIDITY	Q.TY
28	619.4.042.1B	Rear brake line (METAL PLAITED)		1
29	611.4.029.1A	Rear brake caliper		1
30	613.4.038.1A	Pads pair		1
31	612.4.008.1A	Dust seal		1
32	771.5.723.8B	Screw		2
33	713.1.192.1A	Spacer		3
34	552.4.037.3E	Speed sensor		1
35	771.5.665.8B	Screw		1

CATALOGUE No: 915.1.290.1B
ISSUED: 04 - 09

DRAWING 026 Front and rear wheels

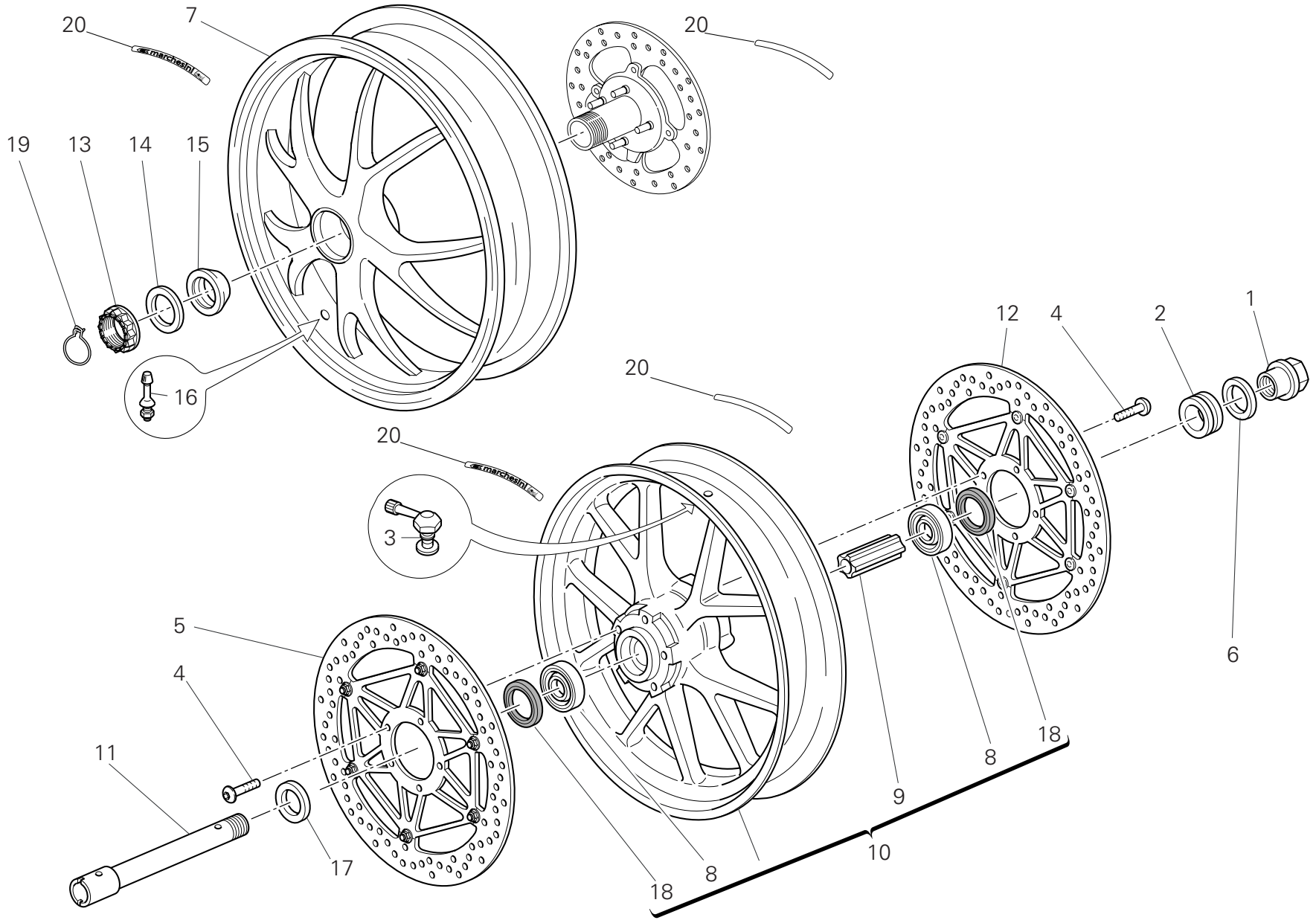

DRAWING 026 Front and rear wheels

NOTES NO.	CODE NO.	DESCRIPTION	VALIDITY	Q.TY
1	748.1.065.1A	Nut		1
2	713.1.197.3A	Spacer (L.H.)		1
3	497.2.001.2A	Valve		1
4	779.1.399.1A	Screw		10
5	492.4.102.1A	Brake disc (R.H.)		1
6	852.1.222.1A	Washer		1
7	502.2.125.1AF	Wheel rim (rear) (BRONZE)		1
8	702.5.045.1A	Bearing		2
9	714.1.047.1A	Spacer (internal)		1
10	501.2.115.1AF	Wheel rim (front) (BRONZE)		1
11	819.1.060.1A	Wheel spindle (front)		1
12	492.4.089.1A	Brake disc (L.H.)		1
13	750.1.140.1A	Nut		1
14	852.1.221.1A	Washer		1
15	714.1.074.1A	Spacer		1
16	497.2.003.1A	Valve		1
17	713.1.196.1A	Spacer (R.H.)		1
18	930.4.052.1A	Seal ring		2
19	759.1.022.2A	Clip		1
20	438.1.454.1A	Sticker "MARCHESINI" (WHITE)		1
20	438.1.455.1A	Sticker "MARCHESINI" (YELLOW)		1

NOTES NO.	CODE NO.	DESCRIPTION	VALIDITY	Q.TY

CATALOGUE No: 915.1.290.1B
ISSUED: 04 - 09

DRAWING 026a Rear wheel axle

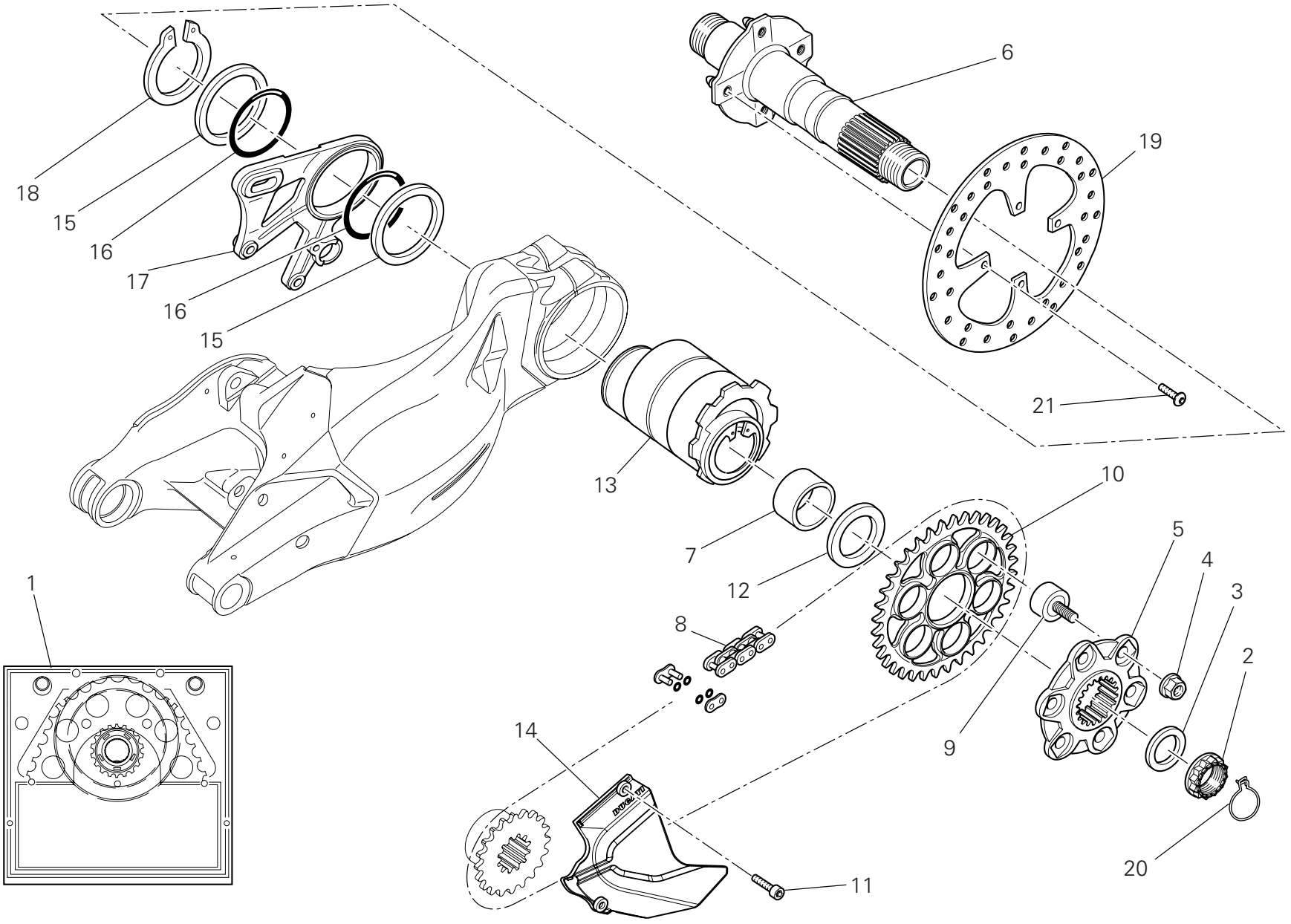

DRAWING 026a Rear wheel axle

NOTES NO.	CODE NO.	DESCRIPTION	VALIDITY	Q.TY
1	676.2.074.1A	Final drive kit		1
2	750.1.140.1A	Nut		1
3	852.1.221.1A	Washer		1
4	748.1.046.1A	Nut		6
5	160.1.369.2B	Rear sprocket flange		1
6	819.2.063.2A	Wheel spindle (rear)		1
7	881.1.054.1A	Inner ring		1
8	676.4.074.1A	Chain 101+1		1
9	700.9.056.2A	Rubber cush drive hub		6
10	494.1.132.1A	Ring gear Z=38		1
11	771.1.039.1A	Screw		2
12	714.1.075.1A	Spacer		1
13	756.2.007.1A	Hub		1
14	460.1.255.1A	Chain cover		1
15	852.1.217.1A	Washer		2
16	886.4.124.1A	O-ring		2
17	825.1.036.2A	Caliper holder plate		1
18	884.4.051.1A	Circlip		1
19	492.1.004.1A	Rear brake disc		1
20	759.1.022.2A	Clip		1
21	779.1.488.1A	Screw		4

NOTES NO.	CODE NO.	DESCRIPTION	VALIDITY	Q.TY

CATALOGUE No: 915.1.290.1B
ISSUED: 04 - 09

DRAWING 027 Rear subframe

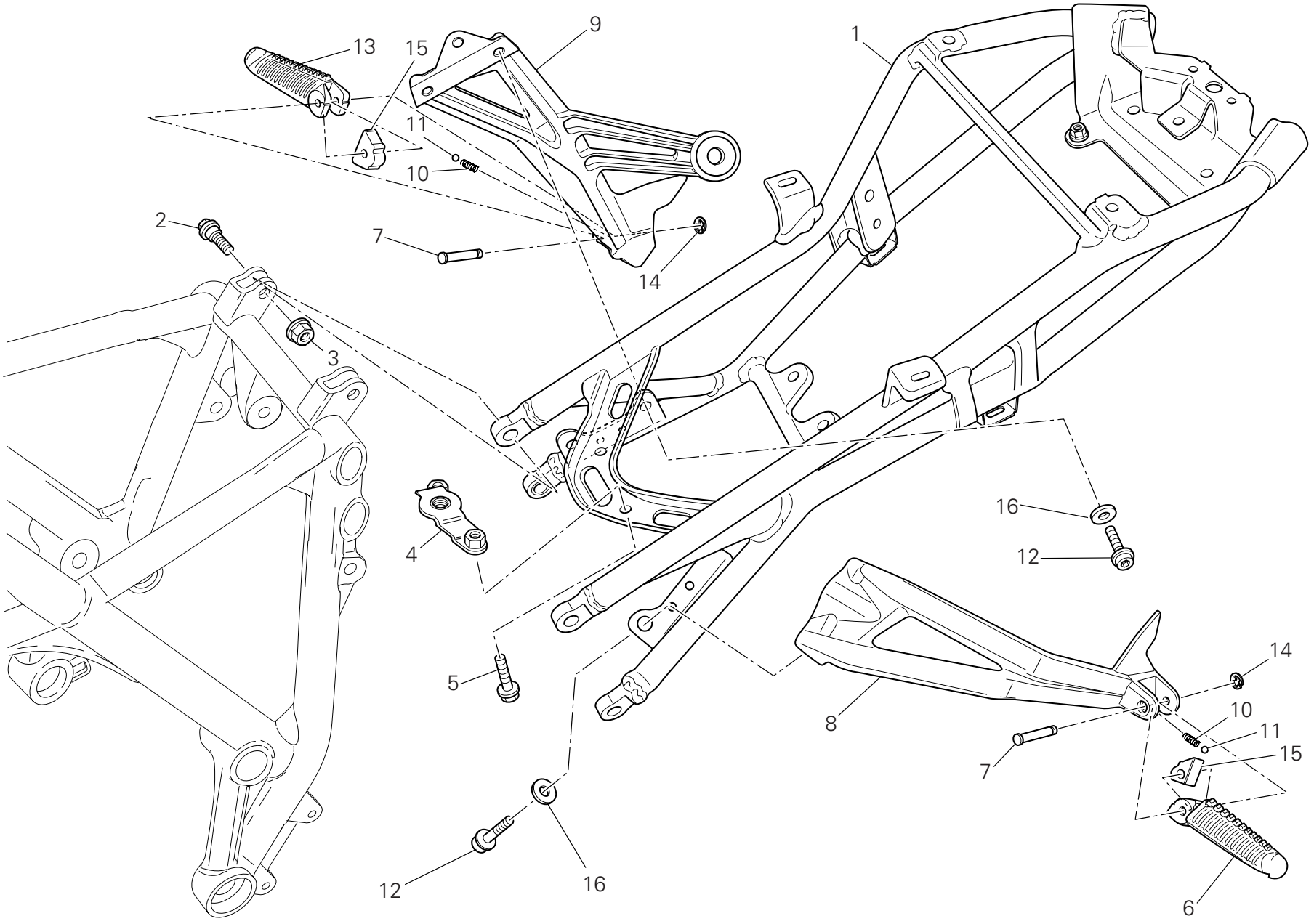

DRAWING 027 Rear subframe

NOTES NO.	CODE NO.	DESCRIPTION	VALIDITY	Q.TY
1	470.1.198.1AA	Rear frame		1
2	772.1.087.3AB	Screw		4
3	749.4.112.8B	Nut		4
4	830.1.543.1A	Bracket		1
5	771.1.369.1A	Screw		2
6	464.1.055.1A	Foot peg (rear) (L.H.)		1
7	821.1.051.1AB	Pin		2
8	824.1.156.1A	Foot peg holder plate (rear) (L.H.)		1
9	824.1.157.1A	Foot peg holder plate (rear) (R.H.)		1
10	799.1.024.1A	Spring		2
11	847.4.002.1A	Ball		2
12	771.5.721.3B	Screw		6
13	464.1.056.1A	Foot peg (rear) (R.H.)		1
14	884.5.003.1A	Ring		2
15	696.1.012.1A	Block		2
16	852.1.232.1A	Washer		6

NOTES NO.	CODE NO.	DESCRIPTION	VALIDITY	Q.TY

CATALOGUE No: 915.1.290.1B
ISSUED: 04 - 09

DRAWING 027a Number plate holder

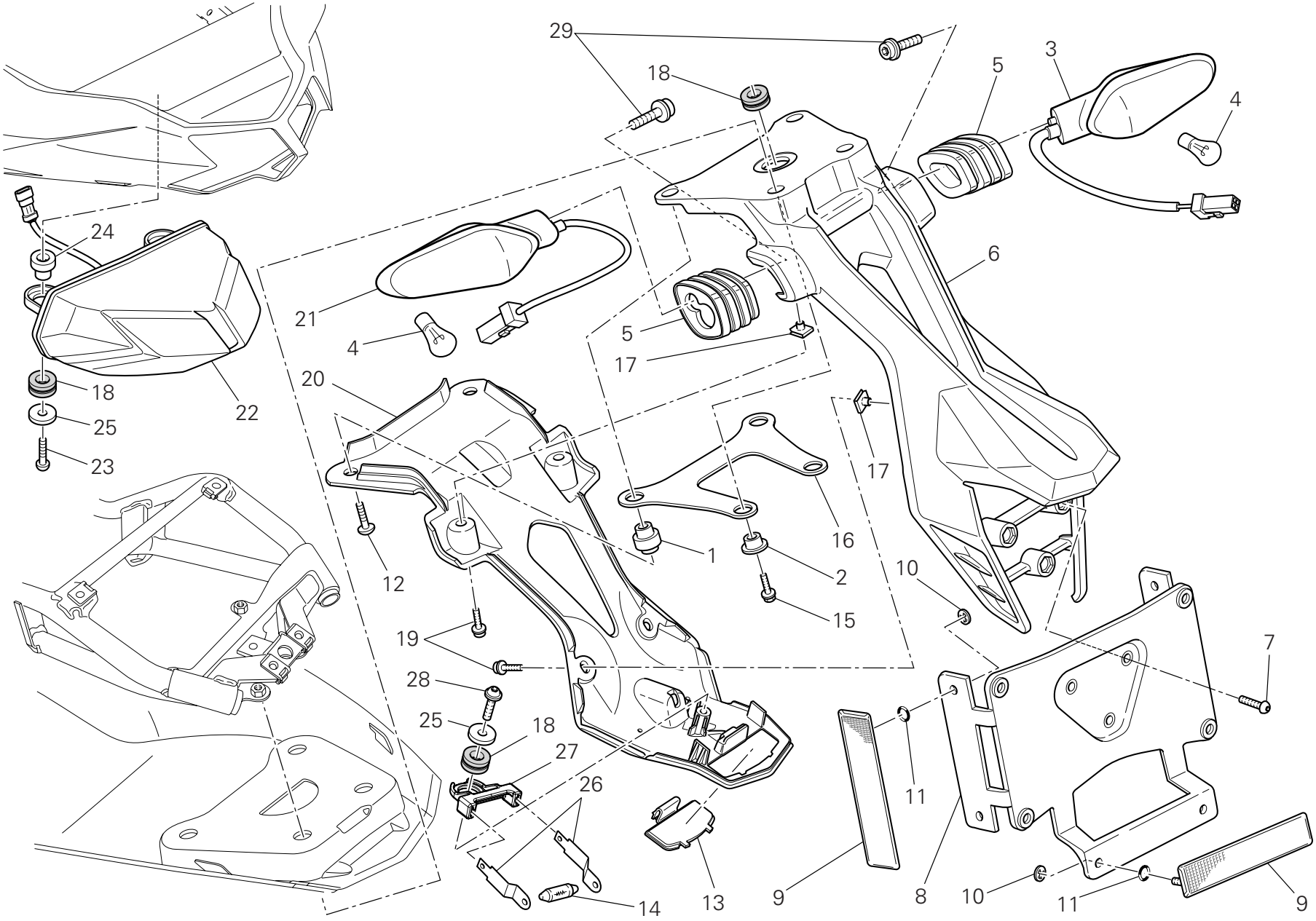

DRAWING 027a Number plate holder

NOTES NO.	CODE NO.	DESCRIPTION	VALIDITY	Q.TY
1	716.1.154.1A	Spacer (front)		2
2	716.1.155.1A	Spacer (rear)		2
3	530.1.022.4A	Turn indicator (rear) (R.H.)		1
4	390.4.021.1A	Bulb 12V-10W RY10W		2
5	713.1.470.1A	Spacer		2
6	829.1.981.1A	Number plate holder		1
7	775.5.013.1A	Screw		3
8	561.1.027.1A	Plate		1
9	529.1.010.1A	Reflector		3
10	850.4.052.1A	Quik fastening		6
11	886.4.064.1A	O-ring		6
12	772.1.101.1B	Screw		2
13	247.1.333.1A	Cover		1
14	390.4.016.1A	Bulb 12V-5W C5W		1
15	772.5.101.8B	Screw		2
16	829.1.980.1A	Holder		1
17	850.4.047.1A	Quik fastening		5
18	764.1.090.1A	Rubber pad		4
19	773.5.039.3B	Screw		5
20	247.1.345.1A	Mudflap		1
21	530.1.023.4A	Turn indicator (rear) (L.H.)		1
22	525.1.037.1A	Tail light		1
23	775.1.045.1A	Screw		2
24	716.1.418.1A	Spacer		2
25	852.4.173.1A	Washer		2
26	391.1.003.3A	Blade		2
27	830.1.548.1A	Bracket		1
28	774.4.006.1A	Screw		1
29	771.5.639.8B	Screw		2

CATALOGUE No: 915.1.290.1B
ISSUED: 04 - 09

DRAWING 028 Rear suspension

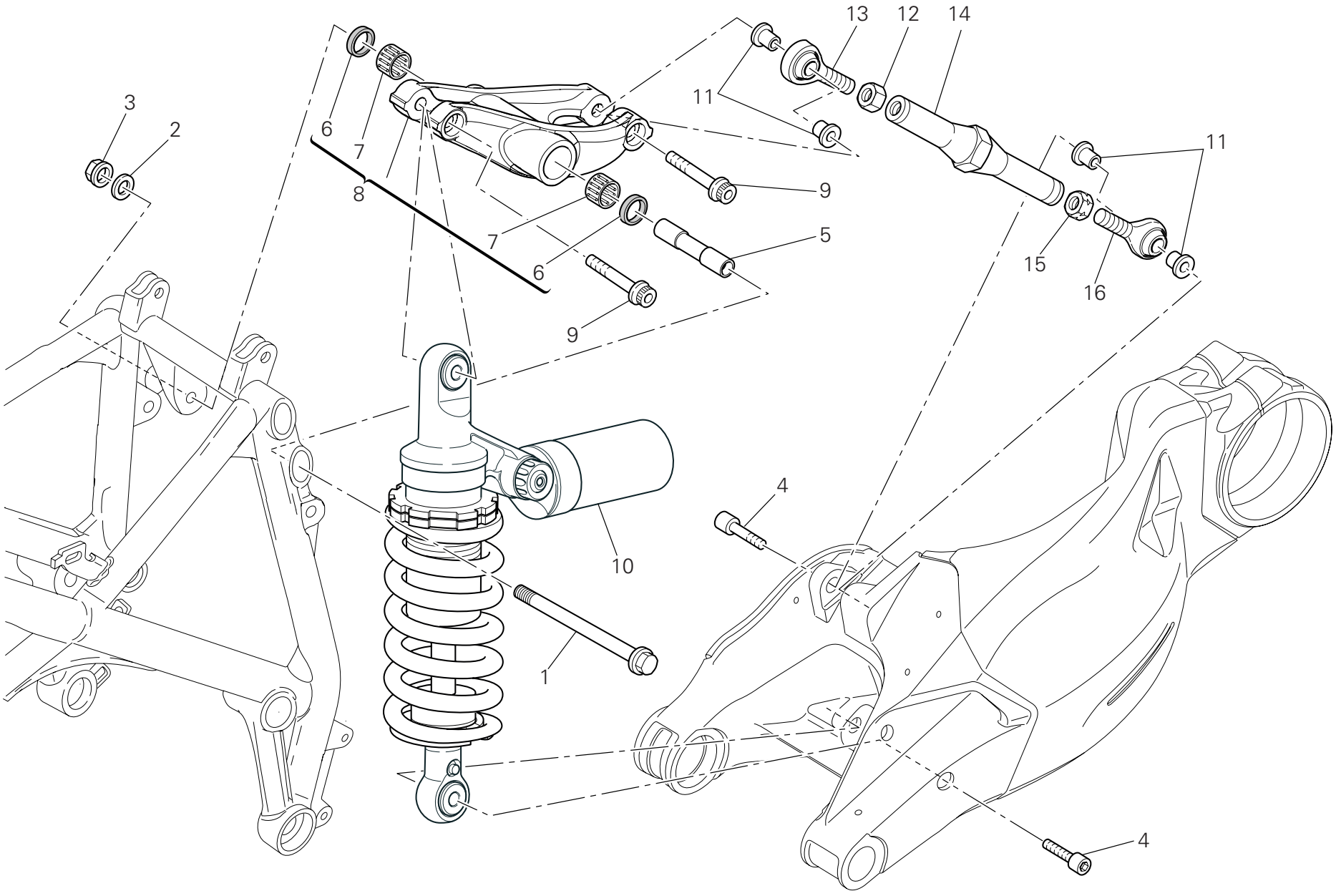

DRAWING 028 Rear suspension

NOTES NO.	CODE NO.	DESCRIPTION	VALIDITY	Q.TY
1	771.1.031.1A	Screw		1
2	713.1.239.1A	Washer		1
3	748.4.037.1AB	Nut		1
4	779.1.504.1A	Screw		2
5	715.1.003.1A	Spacer		1
6	930.4.011.1A	Seal ring		2
7	701.4.004.1A	Needle bearing		2
8	372.2.062.2A	Rocker assembly		1
9	771.5.938.8B	Screw		2
10	365.2.075.2A	Shock absorber (OHLINS)		1
11	710.1.132.1A	Bush		4
12	750.1.021.1A	Nut		1
13	848.4.026.1A	Ball joint		1
14	875.1.128.1A	Tie rod		1
15	750.1.022.1A	Nut		1
16	848.4.027.1A	Ball joint		1

NOTES NO.	CODE NO.	DESCRIPTION	VALIDITY	Q.TY

CATALOGUE No: 915.1.290.1B
ISSUED: 04 - 09

DRAWING 028a Swingarm

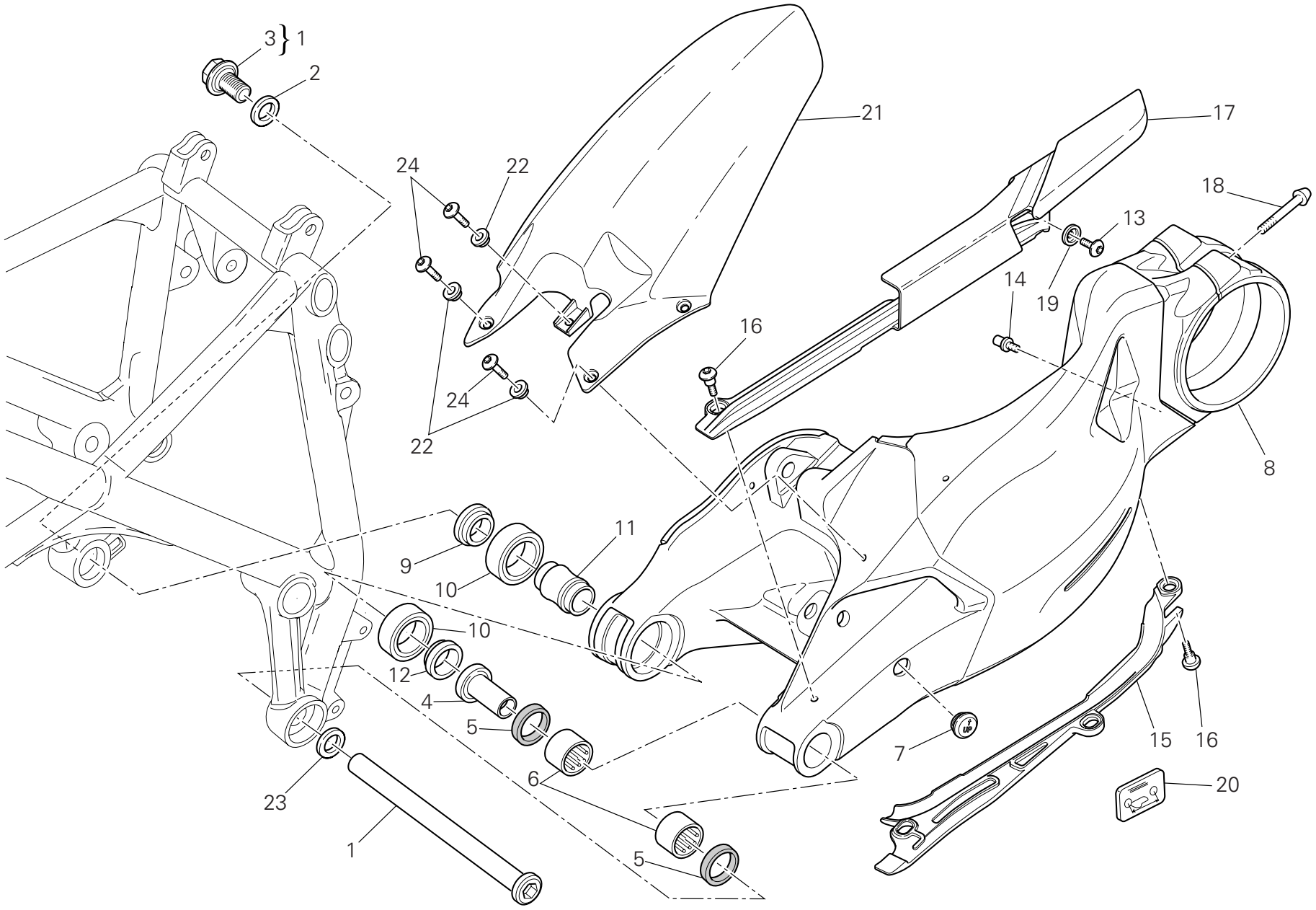

DRAWING 028a Swingarm

NOTES NO.	CODE NO.	DESCRIPTION	VALIDITY	Q.TY
1	369.2.123.3A	Swingarm pivot		1
2	852.1.216.1A	Washer		1
3	772.1.078.2A	Special screw		1
4	710.1.109.1A	Bush		1
5	930.5.012.1A	Seal ring		2
6	701.4.017.1A	Needle bearing		2
7	872.1.054.2A	Cap		1
8	370.1.089.1A	Swingarm		1
9	712.1.029.1A	Spacer		1
10	702.5.045.1A	Bearing		2
11	713.1.187.1A	Spacer		1
12	712.1.030.1A	Spacer		1
13	775.1.019.1A	Screw		1
14	832.1.003.1C	Pin		1
15	447.1.079.1A	Lower chain sliding shoe		1
16	779.1.440.1B	Screw		4
17	447.1.078.1A	Upper chain sliding shoer		1
18	779.1.503.1A	Screw		1
19	841.1.050.1A	Retainer		1
20	433.1.352.1A	Chain adjustment sticker		1
21	565.1.044.1B	Rear mudguard		1
22	716.1.401.1A	Spacer		4
23	852.1.144.1A	Spacer th. 1,4		1
24	772.1.088.2B	Screw		3

CATALOGUE No: 915.1.290.1B
ISSUED: 04 - 09

DRAWING 029 Air intake - oil breather

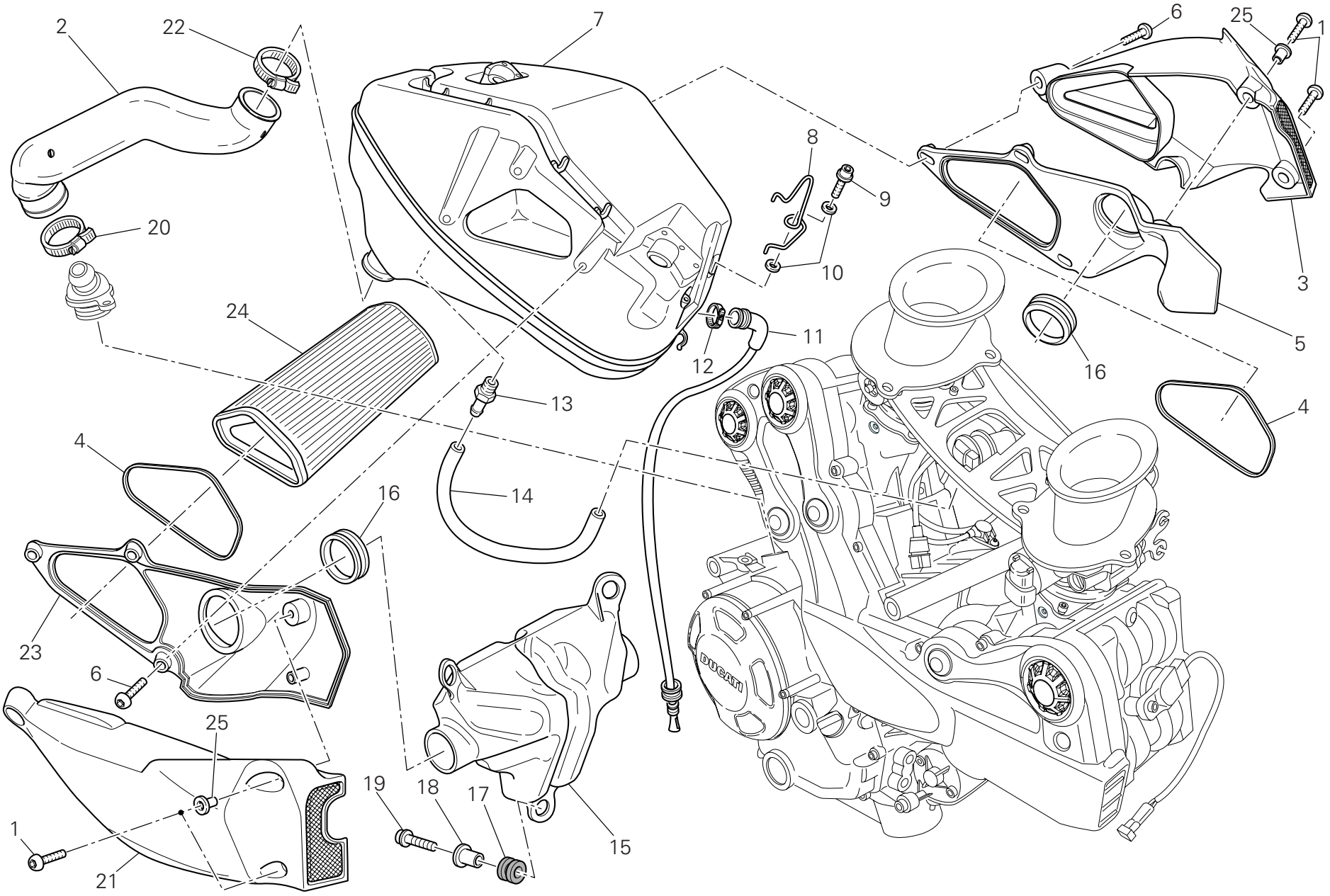

DRAWING 029 Air intake - oil breather

NOTES NO.	CODE NO.	DESCRIPTION	VALIDITY	Q.TY
1	772.1.109.1A	Screw		4
2	876.1.102.2B	Breather pipe		1
3	484.2.075.1A	Air manifold (external) (L.H.)		1
4	788.1.098.1A	Gasket		2
5	484.1.077.1A	Air manifold (internal) (L.H.)		1
6	772.1.042.2A	Screw		6
7	442.1.139.3B	Air filter box		1
8	758.1.036.1A	Fairlead		1
9	773.1.005.1A	Screw		1
10	852.4.021.1A	Washer		2
11	877.2.006.1B	Tube		1
12	741.4.063.1A	Hose guide		1
13	814.1.311.1A	Pressure pick-up point		1
14	934.1.010.1A	Tube		1
15	442.1.184.1A	Expansion tank		1
16	791.1.067.1A	Gasket		2
17	764.1.090.1A	Rubber pad		3
18	716.1.143.1A	Spacer		3
19	771.1.226.1A	Screw		3
20	741.4.186.1A	Clamp		1
21	484.2.076.1A	Air manifold (external) (R.H.)		1
22	741.4.165.1A	Clamp		1
23	484.1.078.1A	Air manifold (internal) (R.H.)		1
24	426.1.020.1A	Air filter		1
25	716.1.407.1A	Spacer		2

NOTES NO.	CODE NO.	DESCRIPTION	VALIDITY	Q.TY

CATALOGUE No: 915.1.290.1B
ISSUED: 04 - 09

DRAWING 030 Radiator

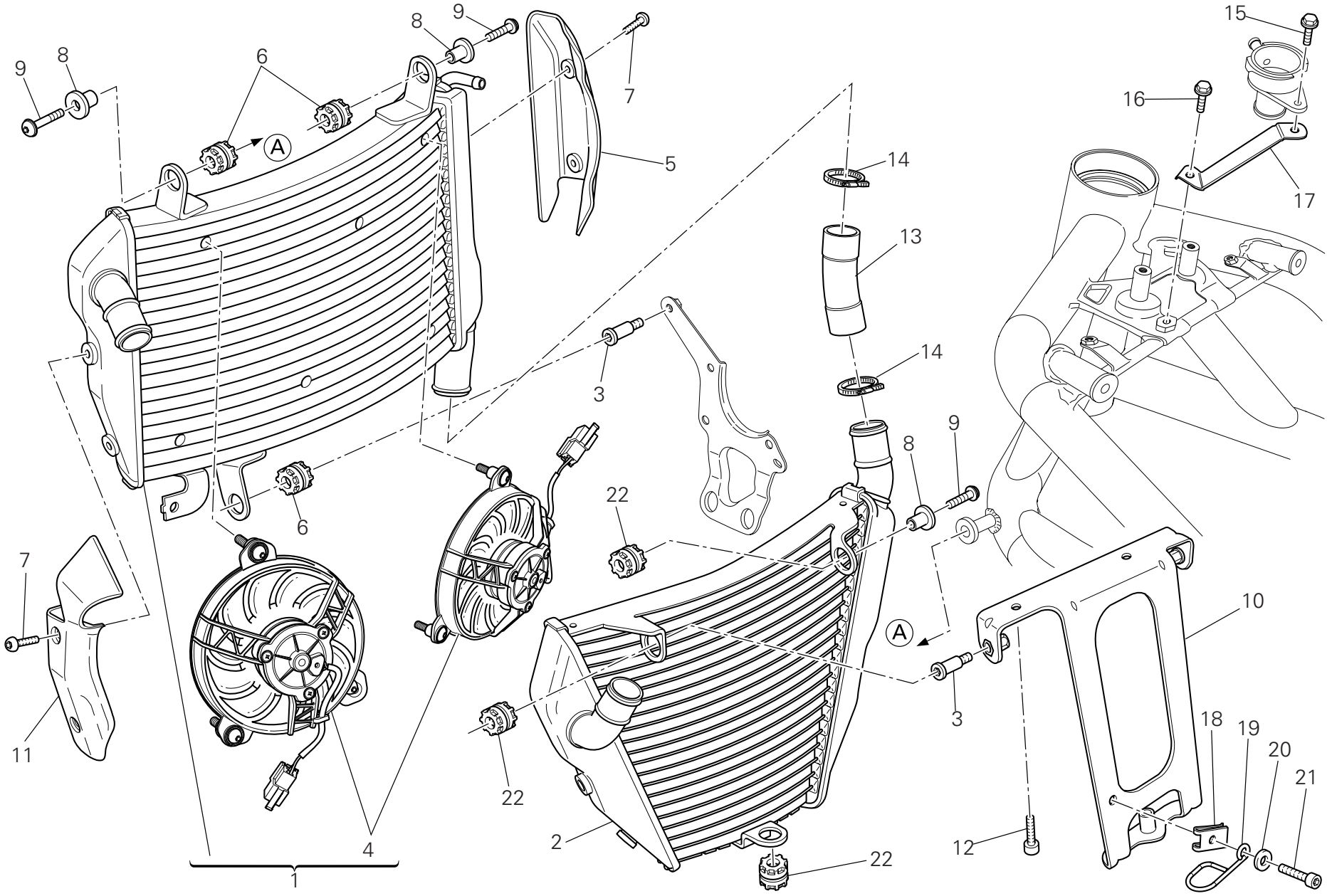

DRAWING 030 Radiator

NOTES NO.	CODE NO.	DESCRIPTION	VALIDITY	Q.TY
1	548.4.083.1A	Water radiator (upper)		1
2	548.4.084.1A	Water radiator (bottom)		1
3	779.1.202.1B	Special screw		2
4	550.4.020.1A	Electric fan		2
5	460.1.366.1A	Cooler cowling (R.H.)		1
6	764.1.022.1A	Vibration damper pad		3
7	775.1.054.1A	Screw		4
8	716.1.419.1A	Spacer		3
9	772.4.046.3C	Screw		1
10	829.2.766.1A	Holder (bottom)		1
11	460.1.367.1A	Cooler cowling (L.H.)		1
12	771.5.064.8B	Screw		2
13	800.1.170.2A	Tube		1
14	741.4.190.1A	Clamp		2
15	772.1.047.1B	Screw		1
16	772.1.059.1A	Screw		1
17	684.1.073.1A	Stud bolt		1
18	850.4.038.1A	Quik fastening		1
19	881.1.023.1A	Ring		1
20	852.5.027.1A	Washer		1
21	772.1.061.1A	Screw		1
22	764.1.024.1A	Vibration damper pad		3

NOTES NO.	CODE NO.	DESCRIPTION	VALIDITY	Q.TY

CATALOGUE No: 915.1.290.1B
ISSUED: 04 - 09

DRAWING 031 Cooling system

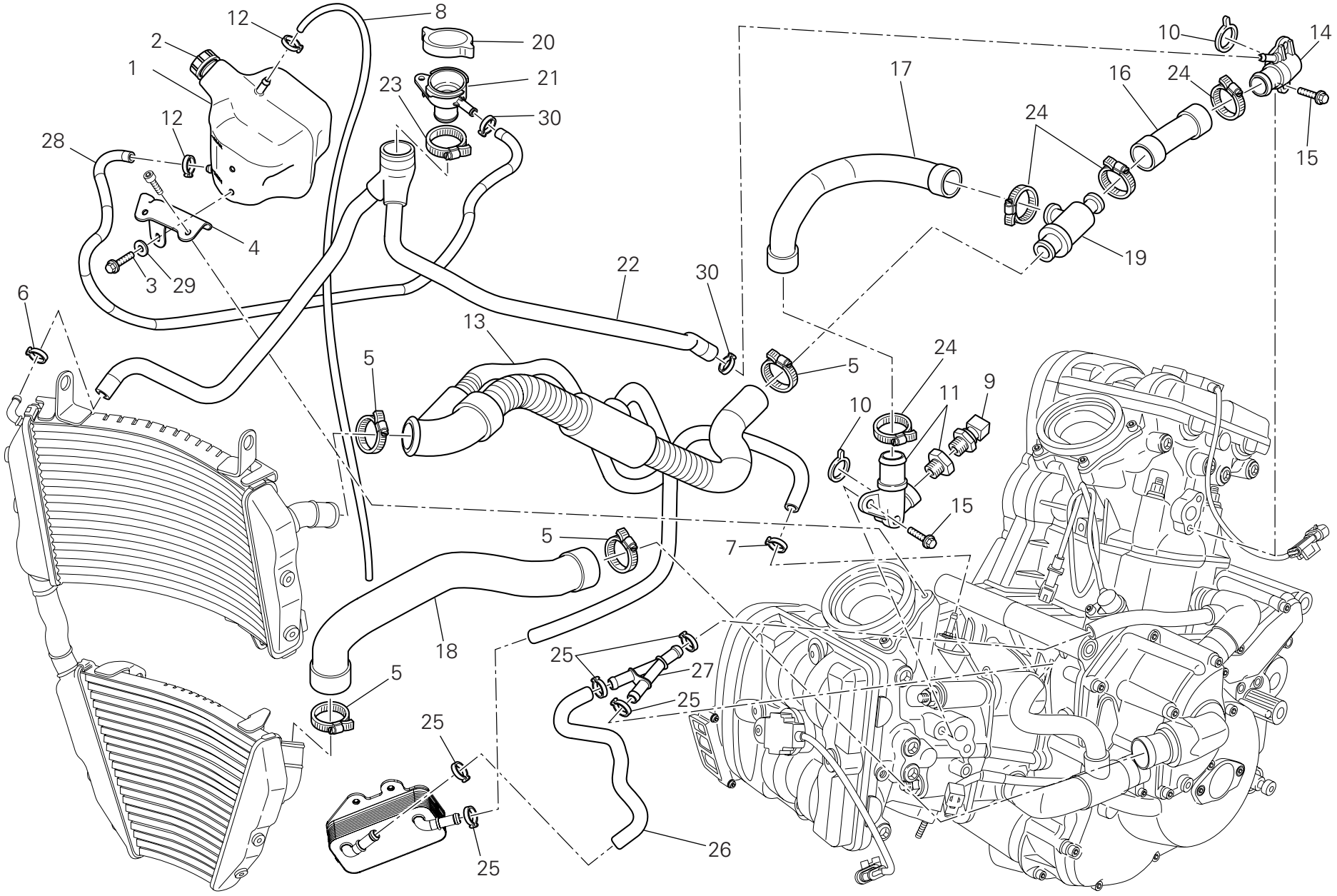

DRAWING 031 Cooling system

NOTES NO.	CODE NO.	DESCRIPTION	VALIDITY	Q.TY
1	585.1.064.1A	Water tank		1
2	893.1.007.1A	Tank cap		1
3	772.1.059.1A	Screw		2
4	830.1.441.1A	Bracket		1
5	741.4.190.1A	Clamp		4
6	741.4.153.1A	Clamp		1
7	741.4.013.1B	Hose guide		1
8	934.1.006.1A	Breather pipe		1
9	552.4.013.1A	Sensor		1
10	886.4.103.1A	O-ring		2
11	814.1.236.1C	Water outlet union (horizontal)		1
12	8A00.67610	Hose guide		2
13	800.1.171.1A	Cooler/thermostat hose		1
14	814.1.326.1A	Water outlet union (vertical)		1
15	772.1.062.1A	Screw		4
16	800.1.172.1A	Thermostat/pump hose (vertical)		1
17	800.1.173.1A	Thermostat/pump hose (horizontal)		1
18	800.1.169.1A	Pump/cooler hose		1
19	553.4.004.1A	Thermostat		1
20	872.4.060.1A	Cap		1
21	668.4.001.1A	Filler		1
22	800.1.177.1A	Cooler/cap hose		1
23	741.4.156.1A	Clamp		1
24	741.4.192.1A	Clamp		4
25	741.4.130.1A	Clamp		5
26	800.1.176.1A	Rubber hose		1
27	814.1.327.1A	Union "Y"		1
28	934.1.012.1A	Tube		1
29	852.1.176.1A	Washer		2
30	741.4.198.1A	Clamp		2

CATALOGUE No: 915.1.290.1B
ISSUED: 04 - 09

DRAWING 032 Fuel tank

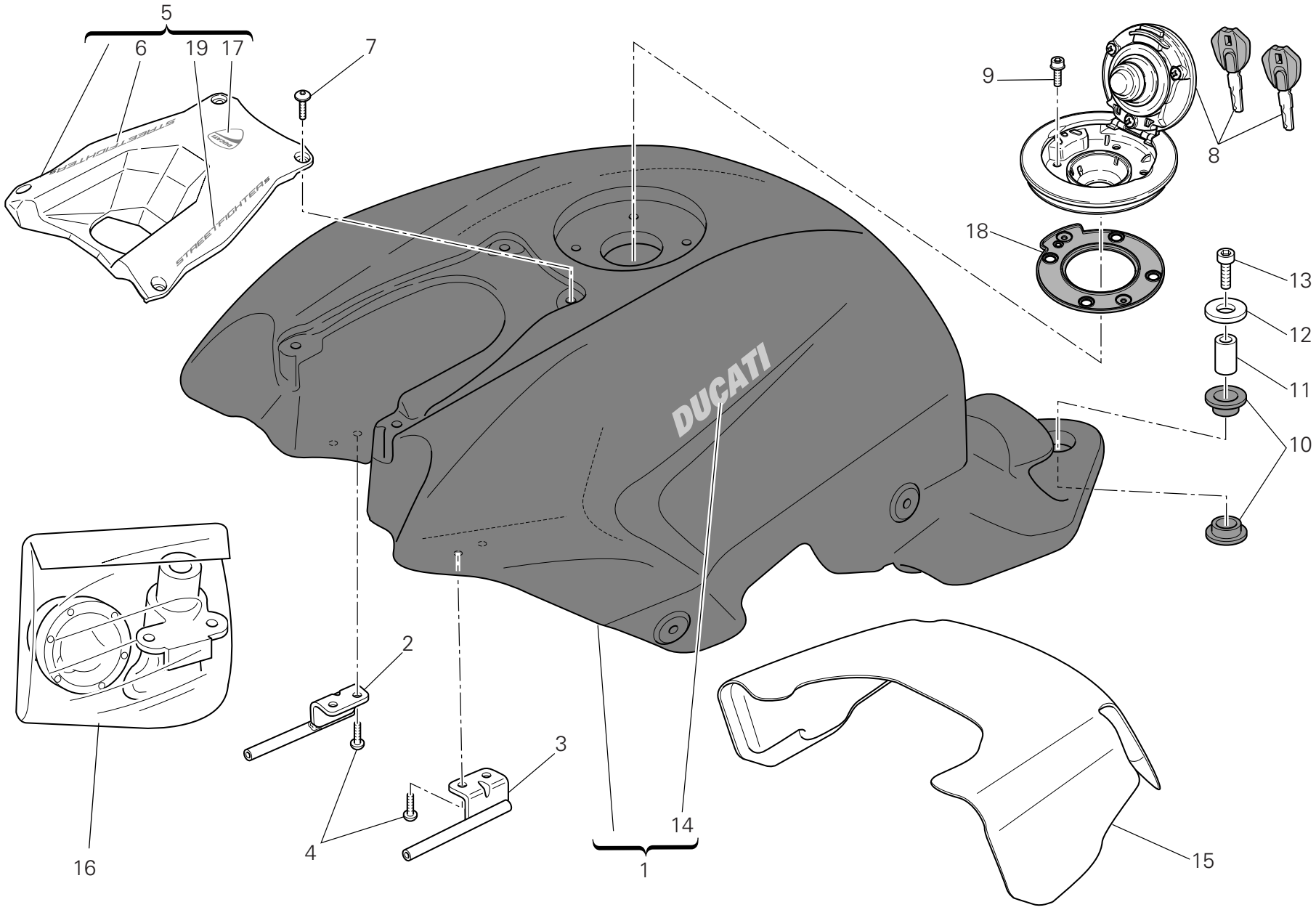

DRAWING 032 Fuel tank

NOTES NO.	CODE NO.	DESCRIPTION	VALIDITY	Q.TY
1	586.1.172.1AA	Tank (RED)		1
1	586.1.172.1AB	Tank (MIDNIGHT BLACK)		1
2	587.1.051.2A	Tank front connection (R.H.)		1
3	587.1.052.2A	Tank front connection (L.H.)		1
4	772.1.050.1C	Screw		4
5	480.2.269.1B	Cover		1
6	438.1.080.1AS	Decal "Streetfighter S" (R.H.)		1
7	775.1.051.1B	Screw		4
8	895.2.020.1A	Tank cap		1
9	771.5.640.8B	Screw		4
10	764.1.001.1A	Rubber pad		2
11	713.1.330.1A	Spacer		1
12	852.1.099.1A	Washer		1
13	771.5.728.8B	Screw		1
14	438.1.365.1AA	Sticker "DUCATI" (for RED)		2
14	438.1.365.1AT	Sticker "DUCATI" (for MIDNIGHT BLACK)		2
15	486.1.081.1A	Panel		1
16	598.2.064.1C	Locks kit		1
17	438.1.082.1A	Sticker "DUCATI"		1
18	866.4.006.1A	Gasket		1
19	438.1.083.1AS	Decal "Streetfighter S" (L.H.)		1

NOTES NO.	CODE NO.	DESCRIPTION	VALIDITY	Q.TY

CATALOGUE No: 915.1.290.1B
ISSUED: 04 - 09

DRAWING 032a Fuel system

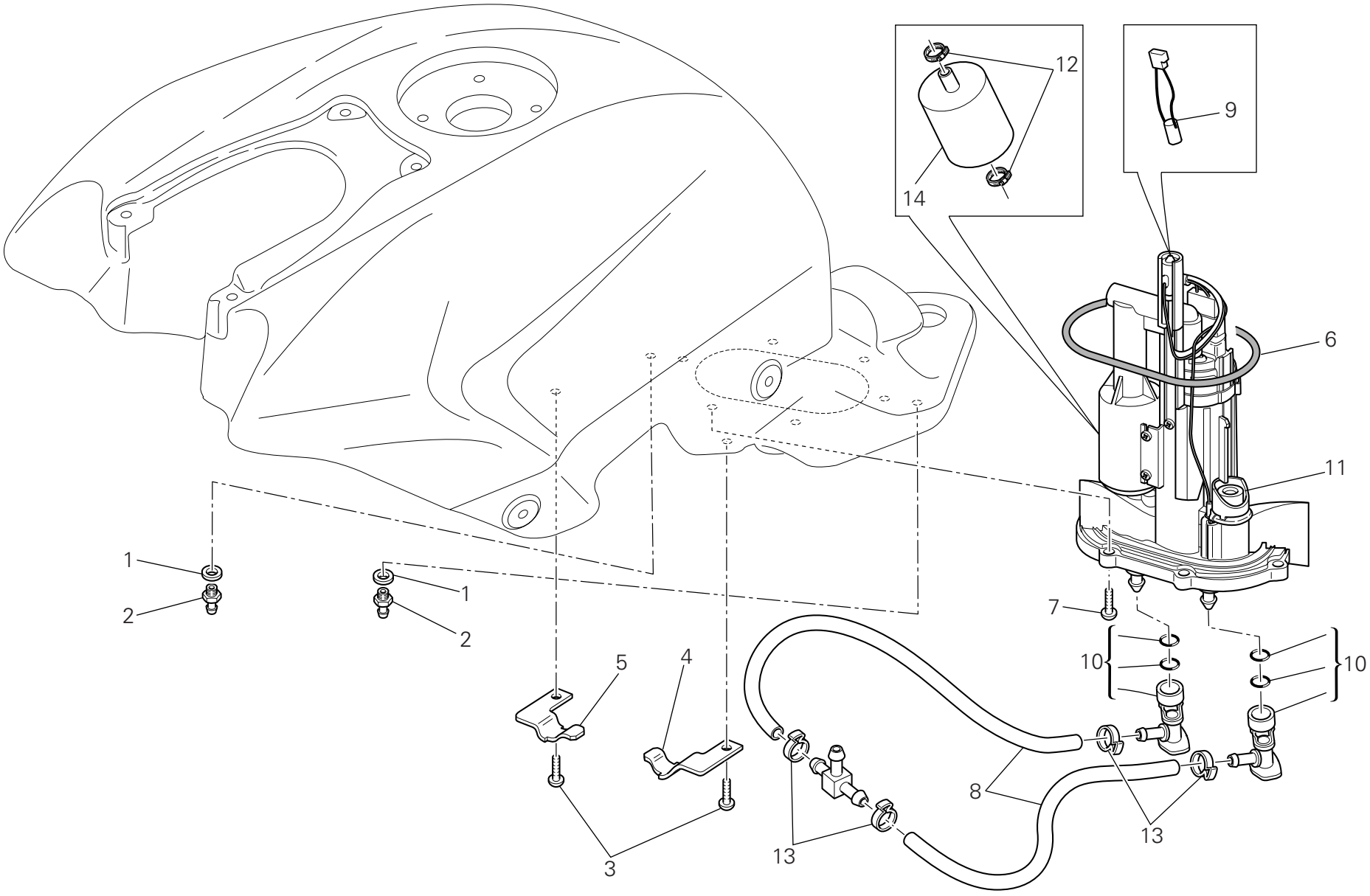

DRAWING 032a Fuel system

NOTES NO.	CODE NO.	DESCRIPTION	VALIDITY	Q.TY
1	886.1.013.1A	Gasket		2
2	814.1.179.1A	Union		2
3	775.1.051.1A	Screw		2
4	830.1.555.1A	Plate (L.H.)		1
5	830.1.554.1A	Plate (R.H.)		1
6	886.5.048.1A	O-Ring		1
7	771.1.044.1A	Screw		6
8	590.1.360.1A	Tube		2
9	552.4.048.1A	Thermistor		1
10	814.4.010.1A	Quick-coupling union		2
11	160.2.366.1A	Flange		1
12	699.2.345.1A	Clamps kit		1
13	287.4.024.1B	Clamp		4
14	425.4.004.1B	Fuel filter		1

NOTES NO.	CODE NO.	DESCRIPTION	VALIDITY	Q.TY

CATALOGUE No: 915.1.290.1B
ISSUED: 04 - 09

DRAWING 033 Seat

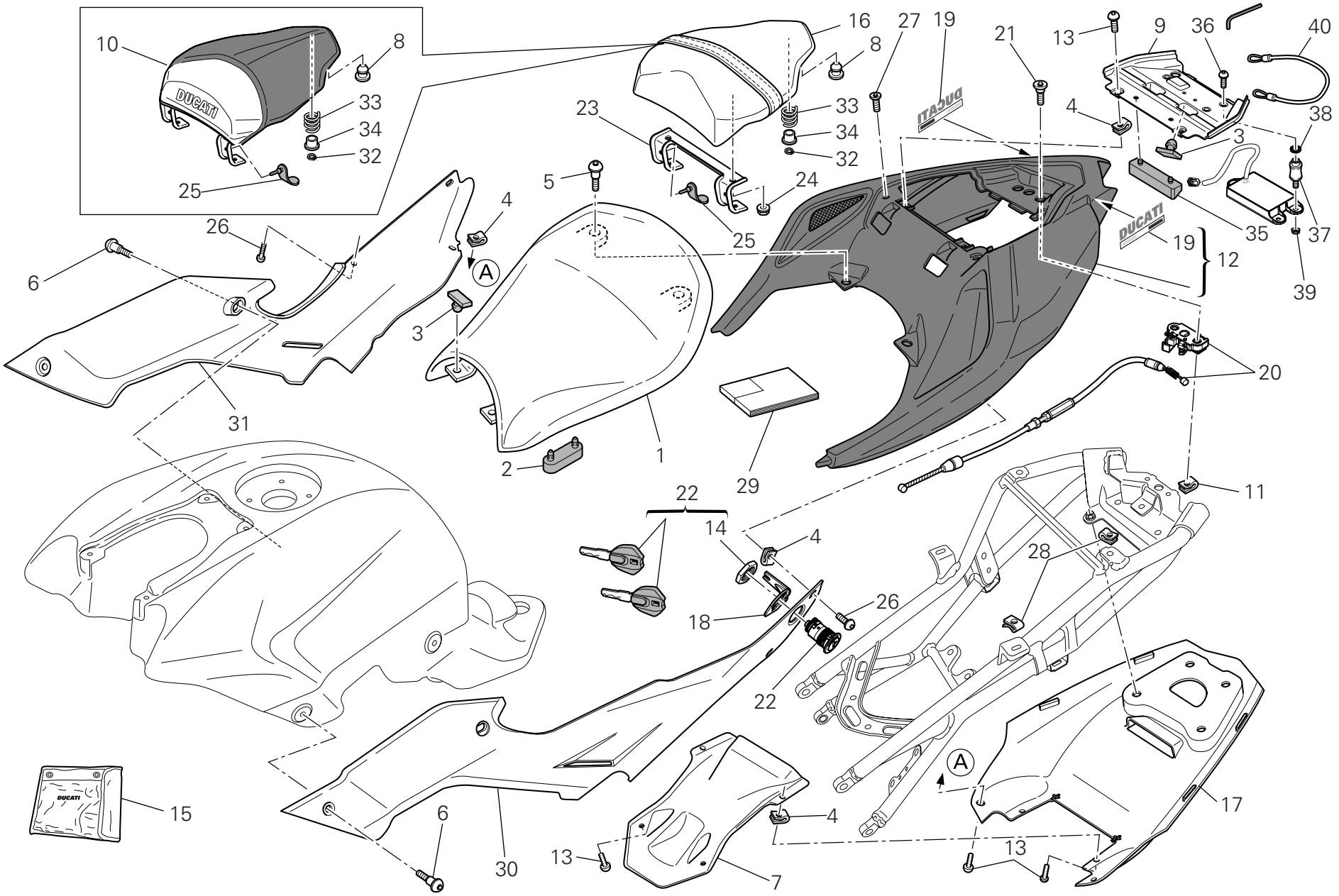

DRAWING 033 Seat

NOTES NO.	CODE NO.	DESCRIPTION	VALIDITY	Q.TY
1	595.1.100.1A	Rider seat		1
2	866.1.104.1A	Rubber pad (big)		4
3	866.1.118.1A	Rubber pad (little)		4
4	850.4.047.1A	Quik fastening		10
5	772.1.084.2A	Special screw		2
6	772.1.085.3B	Special screw		4
7	483.3.082.1B	Tail guard (front) (bottom)		1
8	866.1.107.1A	Rubber pad (rear)		4
9	483.1.081.3A	Chamber		1
10	247.1.342.1AA	Cover seat (RED)		1
10	247.1.342.1AB	Cover seat (MIDNIGHT BLACK)		1
11	850.4.038.1A	Quik fastening		2
12	483.2.075.1AA	Tail guard (RED)		1
12	483.2.075.1AB	Tail guard (MIDNIGHT BLACK)		1
13	775.5.025.1A	Screw		6
14	750.1.155.1A	Special nut		1
15	697.2.025.2A	Tool bag		1
16	595.1.101.1A	Pillion rider seat		1
17	483.1.076.1A	Tail guard (rear) (bottom)		1
18	827.1.482.1A	Plate		1
19	438.1.081.1A	Sticker "DUCATI" (for RED)		2
19	438.1.081.1AT	Sticker "DUCATI" (for MIDNIGHT BLACK)		2
20	598.1.013.1A	Lock latch		1
21	779.1.498.1A	Special screw		2
22	598.2.061.1A	Seat lock		1
23	830.1.564.1A	Hook		1
24	749.4.031.1A	Nut		4
25	764.1.054.1A	Rubber pad		4
26	772.1.109.1A	Screw		4
27	779.1.499.2A	Special screw		2
28	850.4.055.1A	Quik fastening		14
29	913.7.141.1G	Owner's manual		1
30	482.1.156.1A	Body panel (L.H.)		1
31	482.1.157.1A	Body panel (R.H.)		1
32	884.4.025.1A	Circlip		2
33	799.1.175.1A	Spring		2
34	841.1.037.1A	Retainer		2
35	866.1.108.2A	Battery resting buffer		1
36	772.1.104.1A	Screw		3
37	700.1.060.1A	Vibration damper		3
38	855.4.001.1A	Spring washer		3
39	748.1.035.1A	Nut		3
40	732.1.017.1A	Helmet anti-theft wire		1

CATALOGUE No: 915.1.290.1B
ISSUED: 04 - 09

DRAWING 034 Half fairing

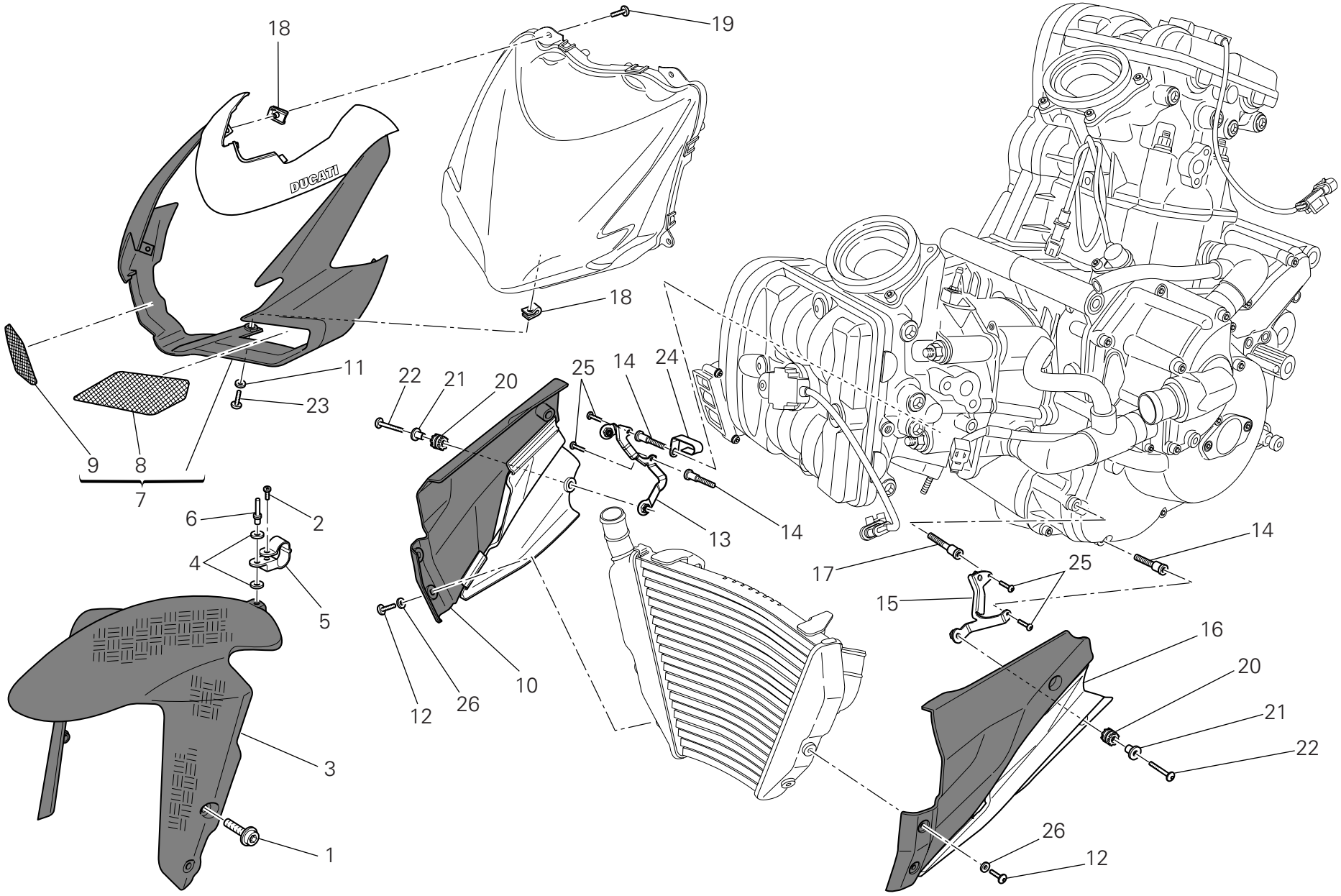

DRAWING 034 Half fairing

NOTES NO.	CODE NO.	DESCRIPTION	VALIDITY	Q.TY
1	772.1.089.3B	Screw		4
2	774.4.010.1A	Screw		1
3	564.2.079.1A	Front mudguard (CARBON)		1
4	852.1.075.1B	Washer		2
5	850.1.209.1A	Hose guide		1
6	736.4.013.1B	Shear rivet		1
7	481.2.056.1AA	Headlight fairing (RED)		1
7	481.2.056.1AB	Headlight fairing (MIDNIGHT BLACK)		1
8	460.1.387.1A	Net (L.H.)		1
9	460.1.386.1A	Net (R.H.)		1
10	480.2.281.1AA	Push rod (R.H.) (RED)		1
10	480.2.281.1AB	Push rod (R.H.) (MIDNIGHT BLACK)		1
11	852.1.119.1A	Washer		1
12	772.1.102.1A	Screw		4
13	827.1.531.1A	Holder (R.H.)		1
14	779.1.605.1A	Special screw		3
15	827.1.530.1A	Holder (L.H.)		1
16	480.2.280.1AA	Push rod (L.H.) (RED)		1
16	480.2.280.1AB	Push rod (L.H.) (MIDNIGHT BLACK)		1
17	779.1.618.1A	Special screw		1
18	850.4.047.1A	Quik fastening		5
19	772.1.085.3B	Special screw		4
20	764.1.022.1A	Vibration damper pad		4
21	716.1.003.1A	Spacer		4
22	772.4.046.3C	Screw		4
23	772.1.109.1A	Screw		1
24	830.1.494.1B	Fairlead		1
25	775.5.025.1A	Screw		4
26	856.1.042.1A	Nylon washer		4

CATALOGUE No: 915.1.290.1B
ISSUED: 04 - 09

DRAWING 035 Evaporative emissions canister

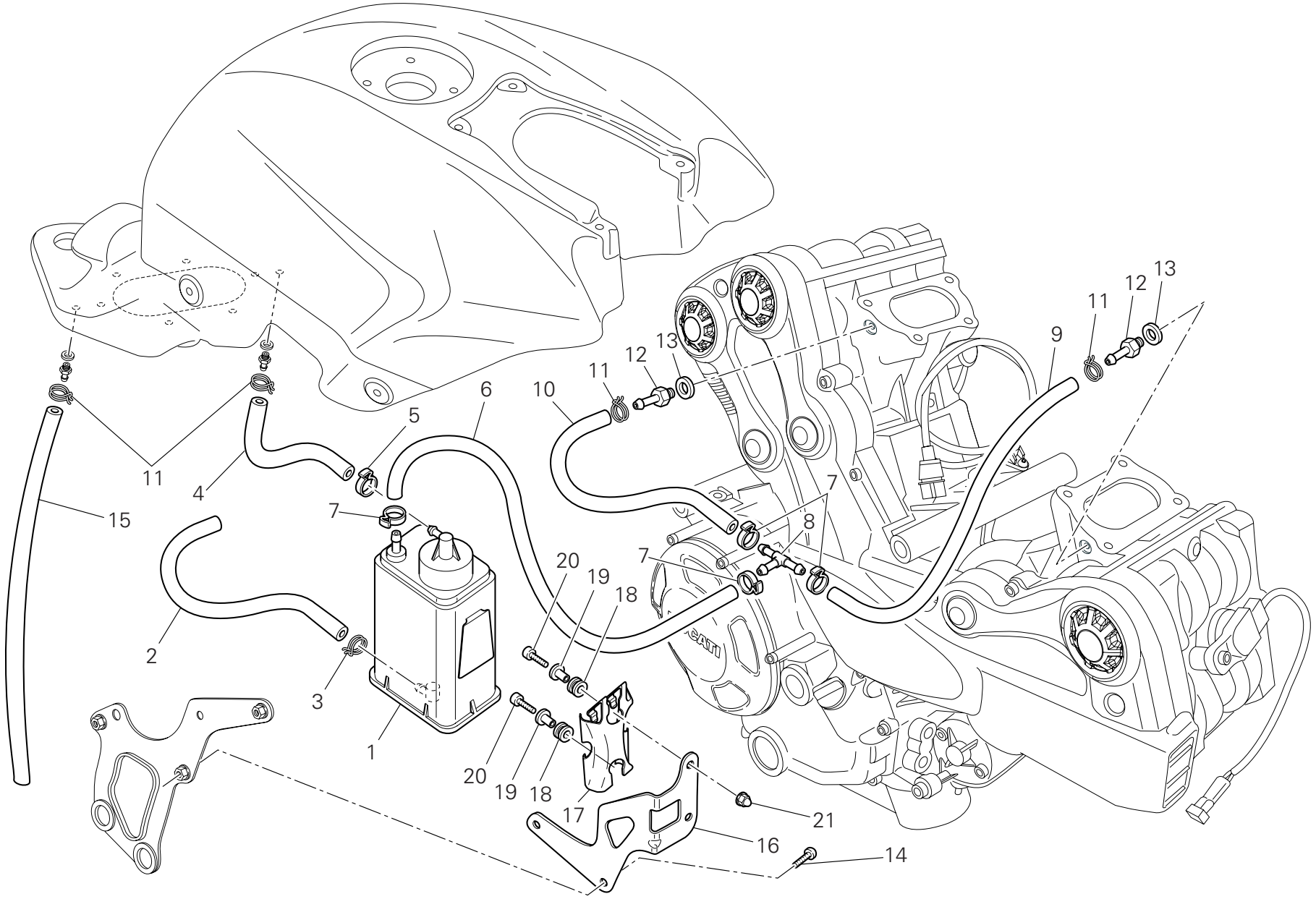

DRAWING 035 Evaporative emissions canister

NOTES NO.	CODE NO.	DESCRIPTION	VALIDITY	Q.TY
1	426.1.007.1B	Canister filter		1
2	590.1.245.1A	Tube 7x13x335		1
3	741.4.057.1A	Hose guide		1
4	590.1.307.1B	Tube		1
5	741.4.063.1A	Hose guide		1
6	590.1.350.1A	Tube		1
7	741.4.058.1A	Clamp		4
8	814.1.183.1A	Shunt valve		1
9	590.1.348.1A	Tube		1
10	590.1.349.1A	Tube		1
11	741.4.043.1A	Hose guide		4
12	814.1.111.3B	Union		2
13	852.5.023.1A	Gasket		2
14	775.5.021.1A	Screw		2
15	590.1.351.1A	Tube		1
16	830.1.465.1A	Bracket		1
17	827.1.157.1A	Plate		1
18	764.1.029.1A	Rubber pad		2
19	716.1.043.1C	Spacer		2
20	771.5.064.8B	Screw		2
21	749.1.002.1A	Special nut		2

NOTES NO.	CODE NO.	DESCRIPTION	VALIDITY	Q.TY

CATALOGUE No: 915.1.290.1B
ISSUED: 04 - 09

DRAWING 036 Data plate positions

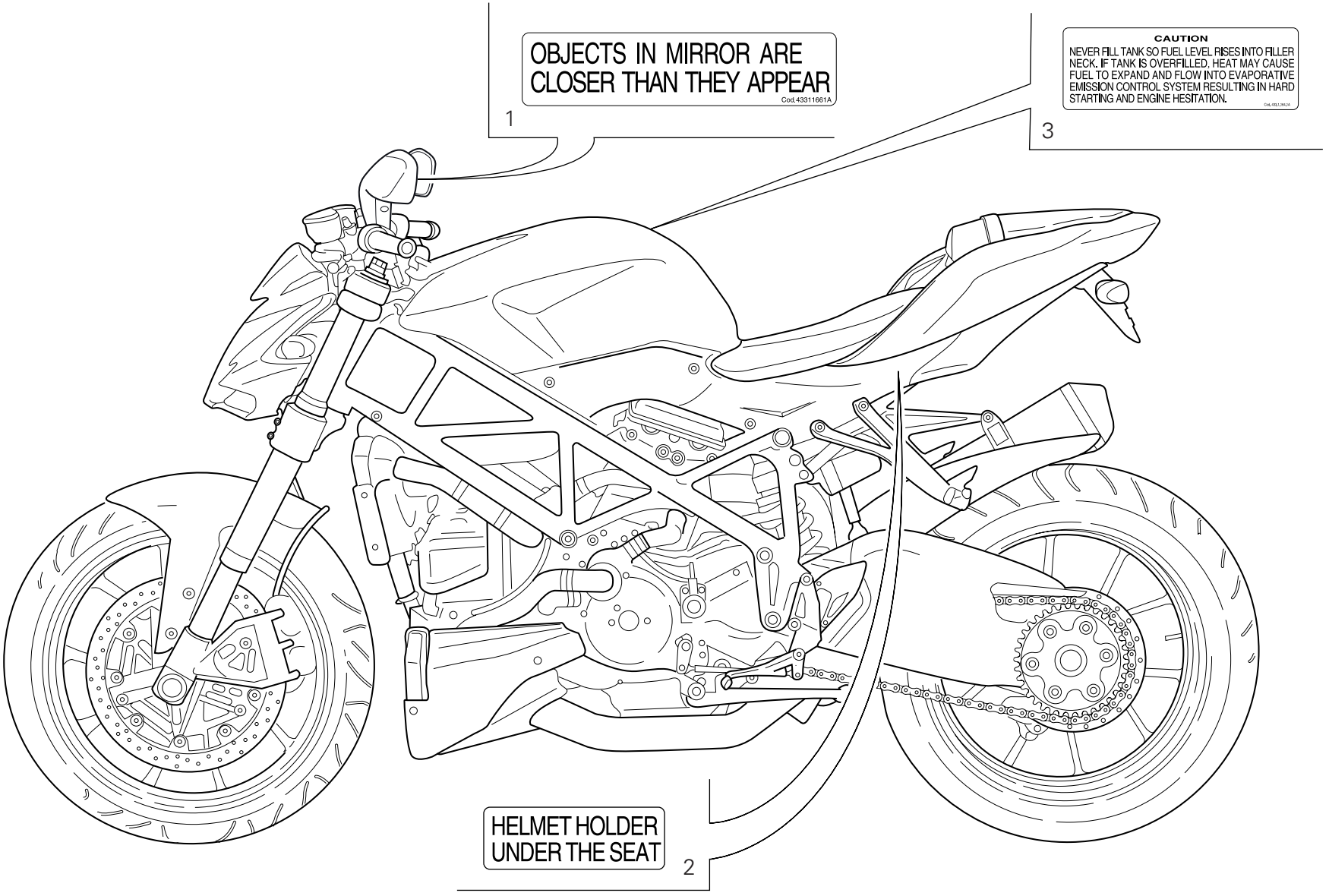

DRAWING 036 Data plate positions

NOTES NO.	CODE NO.	DESCRIPTION	VALIDITY	Q.TY
1	433.1.166.1A	Label		2
2	433.1.170.1A	Sticker		1
3	433.1.164.1A	Sticker		1

NOTES NO.	CODE NO.	DESCRIPTION	VALIDITY	Q.TY

Index

CODE No.	Drwg.	POS. N.	CODE No.	Drwg.	POS. N.	CODE No.	Drwg.	POS. N.	CODE No.	Drwg.	POS. N.	CODE No.	Drwg.	POS. N.
0124.40.060	008	15	120.2.150.4AB	007	5	172.1.002.1B	003	10	208.1.029.1A	015	3	254.4.001.2A	005	4
0251.47.054	003	1	120.2.151.4AB	007	10	172.1.003.3C	003	8	209.1.035.1A	014	16	255.1.010.4B	008	18
0272.91.090	002	8	121.1.078.1B	007	3	172.1.004.3C	003	5	209.1.035.1A	015	16	255.1.019.3A	013	7
0370.49.250	010	22	121.1.079.1A	007	2	172.1.005.3C	003	9	209.1.036.1A	014	4	264.4.053.2A	011	37
0370.72.020	023	8	121.2.051.2A	007	4	172.1.008.1C	003	22	209.1.036.1A	015	4	264.4.059.1A	011	1
0370.72.020	024	12	122.2.167.2A	007	1	172.1.009.1C	003	21	210.1.072.1A	014	14	270.4.010.1A	012	1
0400.09.050	002	21	135.1.023.2A	017	7	172.1.010.3C	003	20	210.1.072.1A	015	14	276.1.038.2A	012	16
0400.29.125	002	31	140.1.048.1B	017	1	172.1.011.3C	003	23	211.1.070.1B	014	5	280.4.016.1A	017	13
0400.29.126	002	31	146.2.143.1A	006	1	172.1.218.2A	003	18	211.1.070.1B	015	5	282.4.079.1B	017	11
0660.13.143	002	9	147.1.014.2A	008	3	172.1.219.2A	003	24	225.2.248.1A	010	1	283.4.024.1A	017	15
0660.13.165	002	25	148.2.306.2A	013	15	173.1.022.1A	012	14	242.2.074.1AC	011	13	286.1.117.1E	018a	4
0660.16.145	004	21	148.2.307.2A	013	11	174.1.038.1A	009	12	243.2.115.1AE	005	21	286.2.040.1B	018a	6
0665.49.680	005	22	148.2.308.2A	013	14	174.2.038.1A	009	1	243.2.125.1AC	005	1	286.4.186.1C	018	13
0670.16.145	003	7	148.2.309.2A	013	18	176.1.020.1A	012	10	245.1.108.1A	008	2	286.4.186.1D	018	13
0670.16.150	003	3	149.1.061.1A	003	25	180.1.001.1A	002	11	245.1.109.1A	008	1	287.4.024.1B	032a	13
0670.16.155	003	19	150.2.092.3A	003	28	180.1.002.1A	002	12	245.2.107.1A	008	29	301.2.238.4BB	015	22
0670.16.170	003	26	150.2.105.1A	003	2	180.1.008.1A	002	24	247.1.287.1B	013	5	301.2.239.4BB	014	22
0670.49.310	009	17	150.2.106.1A	003	27	182.2.028.3A	002	18	247.1.288.1B	013	6	303.1.051.1BB	014	7
0691.91.030	018a	17	158.2.020.2A	006	5	184.1.010.2A	025	20	247.1.290.1AB	009	19	303.1.051.1BB	015	7
0759.49.280	009	15	160.1.094.1A	013	10	187.1.002.1A	023	3	247.1.305.1AF	011	23	303.1.051.1BC	014	7
0765.92.205	002	21	160.1.367.4A	019	37	187.1.002.1A	024	22	247.1.333.1A	027a	13	303.1.051.1BC	015	7
0799.13.110	002	27	160.1.369.2B	026a	5	190.2.020.1A	004	8	247.1.335.1A	020	26	303.1.051.1BD	014	7
112.1.012.1AB	006	8	160.1.370.1A	012	13	194.2.043.1A	004	12	247.1.342.1AA	033	10	303.1.051.1BD	015	7
112.1.012.1AC	006	8	160.2.366.1A	032a	11	195.4.003.1A	004	22	247.1.342.1AB	033	10	304.1.063.1A	014	10
117.1.044.1A	025	18	162.1.001.1C	004	7	196.1.001.1D	004	10	247.1.345.1A	027a	20	304.1.063.1A	015	10
117.1.088.2A	022	8	170.2.109.1A	004	17	198.1.029.1A	004	13	247.2.130.1AC	011	31	304.1.063.1AB	014	10
117.2.006.1A	004	29	171.Z.003.1A	008	13	208.1.029.1A	014	3	251.2.008.1A	011	29	304.1.063.1AB	015	10

CATALOGUE No: 915.1.290.1B
ISSUED: 04 - 09

CODE No.	Drwg.	POS. N.	CODE No.	Drwg.	POS. N.	CODE No.	Drwg.	POS. N.	CODE No.	Drwg.	POS. N.	CODE No.	Drwg.	POS. N.
304.1.063.1AC	014	10	389.4.022.1A	018a	5	438.1.365.1AA	032	14	460.1.387.1A	034	8	484.1.077.1A	029	5
304.1.063.1AC	015	10	389.4.023.1A	018	19	438.1.365.1AT	032	14	460.1.405.1A	019	48	484.1.078.1A	029	23
304.1.064.1B	014	13	389.4.024.1A	018a	5	438.1.454.1A	026	20	460.2.359.1A	019	36	484.2.075.1A	029	3
304.1.064.1B	015	13	390.4.016.1A	027a	14	438.1.455.1A	026	20	462.4.046.1A	019	39	484.2.076.1A	029	21
304.1.064.1BB	014	13	390.4.021.1A	020	10	442.1.139.3B	029	7	463.2.022.2A	010	12	486.1.081.1A	032	15
304.1.064.1BB	015	13	390.4.021.1A	027a	4	442.1.184.1A	029	15	463.2.053.7A	003	14	486.1.082.1A	005	23
304.1.064.1BC	014	13	390.4.024.1A	020	22	444.4.003.4A	009	20	463.2.053.7A	004	15	492.1.004.1A	026a	19
304.1.064.1BC	015	13	390.4.026.1A	020	20	447.1.078.1A	028a	17	464.1.055.1A	022	12	492.4.089.1A	026	12
341.2.071.1A	021	23	390.4.027.1A	020	21	447.1.079.1A	028a	15	464.1.055.1A	027	6	492.4.102.1A	026	5
342.2.057.1A	021	3	391.1.003.3A	027a	26	449.1.053.1A	003	12	464.1.056.1A	022	5	494.1.132.1A	026a	10
344.2.017.1B	021a	1	395.2.013.1C	018	23	451.1.017.1A	008	22	464.1.056.1A	027	13	497.2.001.2A	026	3
345.2.017.1B	021a	2	397.4.007.1A	018	18	451.1.018.2A	008	9	470.1.198.1AA	027	1	497.2.003.1A	026	16
349.2.039.1A	021a	4	406.1.072.4A	020	27	451.1.043.1A	008	16	470.1.199.1AB	022	1	501.2.115.1AF	026	10
349.2.040.1A	021a	5	417.6.011.3A	014	20	451.1.044.1A	008	4	480.2.269.1B	032	5	502.2.125.1AF	026	7
360.1.100.1A	021	31	420.2.006.4A	016	5	451.1.047.1A	008	25	480.2.280.1AA	034	16	510.1.570.1A	018a	20
360.1.102.1A	021	24	425.4.004.1B	032a	14	455.2.003.1A	002	4	480.2.280.1AB	034	16	510.1.662.1B	018a	2
360.1.103.1A	021	16	426.1.007.1B	035	1	456.1.046.1B	022	20	480.2.281.1AA	034	10	510.1.694.1B	018a	1
361.1.002.1A	021	15	426.1.020.1A	029	24	456.1.203.1A	022	19	480.2.281.1AB	034	10	514.1.032.1A	001d	9
364.2.009.1A	021	29	433.1.164.1A	036	3	457.1.047.1A	025	6	481.2.056.1AA	034	7	514.1.033.1A	001d	13
365.2.075.2A	028	10	433.1.166.1A	036	1	460.1.255.1A	026a	14	481.2.056.1AB	034	7	514.1.035.1A	001d	10
369.2.123.3A	028a	1	433.1.170.1A	036	2	460.1.275.1A	019	38	482.1.156.1A	033	30	514.1.036.1A	001d	10
370.1.089.1A	028a	8	433.1.352.1A	028a	20	460.1.286.1B	019	2	482.1.157.1A	033	31	514.1.037.1A	001d	6
372.2.062.2A	028	8	438.1.080.1AS	032	6	460.1.293.1A	019	26	483.1.076.1A	033	17	514.1.038.1A	001d	14
380.1.014.5B	018a	11	438.1.081.1A	033	19	460.1.331.1A	022	11	483.1.081.3A	033	9	514.1.062.1A	018	15
389.4.019.1A	018a	5	438.1.081.1AT	033	19	460.1.366.1A	030	5	483.2.075.1AA	033	12	514.1.063.1A	018	22
389.4.020.1A	018a	5	438.1.082.1A	032	17	460.1.367.1A	030	11	483.2.075.1AB	033	12	516.4.004.2B	018a	18
389.4.021.1A	018a	5	438.1.083.1AS	032	19	460.1.386.1A	034	9	483.3.082.1B	033	7	518.4.005.1B	021	37

CATALOGUE No: 915.1.290.1B
ISSUED: 04 - 09

CATALOGUE No: 915.1.290.1B
ISSUED: 04 - 09

Index

CODE No.	Drwg.	POS. N.	CODE No.	Drwg.	POS. N.	CODE No.	Drwg.	POS. N.	CODE No.	Drwg.	POS. N.	CODE No.	Drwg.	POS. N.
520.1.018.1A	020	12	552.1.040.1A	001d	11	590.1.190.1A	001d	2	613.4.038.1A	025	30	668.4.001.1A	031	21
523.4.022.2A	021	8	552.1.111.1A	019	12	590.1.245.1A	035	2	613.4.090.1A	024	8	669.1.001.1E	014	6
523.4.023.2A	021	9	552.4.012.1A	020	29	590.1.307.1B	035	4	618.4.075.1B	024	20	669.1.001.1E	015	6
525.1.037.1A	027a	22	552.4.013.1A	031	9	590.1.348.1A	035	9	618.4.095.1B	024	19	670.4.038.1A	018a	12
529.1.001.2A	021a	6	552.4.037.2E	024	35	590.1.349.1A	035	10	619.4.042.1B	025	28	676.2.074.1A	026a	1
529.1.010.1A	027a	9	552.4.037.3E	025	34	590.1.350.1A	035	6	624.4.057.1A	024	1	676.4.074.1A	026a	8
530.1.022.4A	020	9	552.4.048.1A	032a	9	590.1.351.1A	035	15	625.4.018.1B	025	16	680.1.001.1B	009	24
530.1.022.4A	027a	3	552.4.132.1A	010	31	590.1.360.1A	032a	8	626.4.056.1A	023	18	680.1.013.1A	006	10
530.1.023.4A	020	24	553.4.004.1A	031	19	590.2.026.1A	017	20	626.4.056.1A	024	7	680.1.013.1A	008	12
530.1.023.4A	027a	21	556.1.046.2AB	022a	3	593.1.018.1A	009	5	626.4.066.1A	023	19	680.5.006.1A	013	12
539.1.021.1B	002	6	556.2.045.1A	022a	1	593.2.042.1A	010	11	626.4.067.1A	024	24	684.1.073.1A	030	17
539.1.023.3A	022a	5	561.1.027.1A	027a	8	593.4.030.1A	018	10	630.4.048.1A	023	1	696.1.012.1A	027	15
539.4.003.1B	025	5	564.2.079.1A	034	3	595.1.100.1A	033	1	631.4.008.1A	023	22	697.2.025.2A	033	15
539.4.030.2A	005	9	565.1.044.1B	028a	21	595.1.101.1A	033	16	631.4.008.1A	024	6	698.1.033.1A	001d	15
539.4.035.1A	024	5	570.1.259.1A	019	11	598.1.013.1A	033	20	631.4.016.1A	025	25	699.2.345.1A	032a	12
539.4.036.1A	023	21	570.1.274.1B	019	24	598.2.061.1A	033	22	631.4.028.1A	023	20	700.1.036.1A	012	19
540.4.019.1A	018	3	571.1.260.2A	019	14	598.2.064.1C	032	16	631.4.028.1A	024	31	700.1.048.1B	020	13
541.4.010.1A	018a	3	573.1.116.1B	019	28	598.4.028.1A	021	39	631.4.033.1A	024	2	700.1.054.1A	021	10
547.1.001.1A	016	6	585.1.064.1A	031	1	598.4.029.1A	021	18	631.4.034.1A	023	2	700.1.060.1A	033	37
548.4.083.1A	030	1	585.4.001.1A	025	26	610.4.090.1C	024	9	632.1.049.1B	023	6	700.1.063.1A	021	46
548.4.084.1A	030	2	585.4.010.1A	023	12	610.4.091.1C	024	26	650.1.009.1D	021	25	700.9.056.2A	026a	9
549.1.090.1A	016	3	585.4.011.1A	024	15	611.4.029.1A	025	29	651.1.011.1C	021	14	701.4.004.1A	028	7
549.1.091.1A	016	4	586.1.172.1AA	032	1	612.4.005.1A	023	4	652.4.014.1B	021	30	701.4.005.1A	003	4
550.4.020.1A	030	4	586.1.172.1AB	032	1	612.4.005.1A	024	21	654.2.016.1A	021	20	701.4.017.1A	028a	6
552.1.037.1A	001d	4	587.1.051.2A	032	2	612.4.008.1A	025	31	656.2.092.1A	021	26	701.4.023.1A	012	11
552.1.038.1A	001d	5	587.1.052.2A	032	3	612.4.016.1A	025	14	668.1.001.4A	007	14	702.4.004.1A	021	6
552.1.039.1A	001d	19	590.1.189.1A	001d	1	612.4.037.1A	024	30	668.1.001.4A	011	16	702.4.009.1A	011	11

CATALOGUE No: 915.1.290.1B
ISSUED: 04 - 09

Index

CODE No.	Drwg.	POS. N.	CODE No.	Drwg.	POS. N.	CODE No.	Drwg.	POS. N.	CODE No.	Drwg.	POS. N.	CODE No.	Drwg.	POS. N.
702.4.010.2A	011	9	711.1.095.1A	010a	7	713.1.458.1A	020	32	72094.1616	010	17	741.4.153.1A	031	6
702.4.013.1A	010	19	711.1.160.1A	005	13	713.1.459.1A	020	33	732.1.017.1A	033	40	741.4.156.1A	031	23
702.4.017.1A	004	20	711.1.160.1A	011	14	713.1.470.1A	027a	5	732.2.027.1A	019	20	741.4.165.1A	029	22
702.4.018.1A	012	15	711.1.219.1A	007	12	713.1.915.1A	002	29	73500.1440	012	20	741.4.186.1A	029	20
702.4.020.1A	010a	11	712.1.029.1A	028a	9	714.1.047.1A	026	9	73500.1542	002	15	741.4.189.1A	017	21
702.4.033.1A	010	21	712.1.030.1A	028a	12	714.1.074.1A	026	15	73500.2054	008	27	741.4.190.1A	030	14
702.4.033.1A	010a	2	712.1.034.1A	022	17	714.1.075.1A	026a	12	73503.3380	010	9	741.4.190.1A	031	5
702.4.058.1A	008	10	712.1.034.1A	025	10	715.1.003.1A	028	5	73503.3380	010a	10	741.4.192.1A	007	7
702.5.008.1A	010	6	713.1.014.1E	003	11	716.1.003.1A	016	10	73503.3380	011	17	741.4.192.1A	031	24
702.5.008.1A	011	4	713.1.128.1B	011	27	716.1.003.1A	034	21	73503.3804	008	26	741.4.193.1A	018a	13
702.5.019.1A	010a	1	713.1.140.1A	010a	4	716.1.043.1C	035	19	736.4.013.1B	034	6	741.4.198.1A	031	30
702.5.044.1A	003	29	713.1.187.1A	028a	11	716.1.072.2A	008	20	737.4.025.1A	008	5	74224.0570	004	24
702.5.045.1A	026	8	713.1.192.1A	024	34	716.1.128.1A	008	17	741.1.040.1A	018a	7	747.5.001.1AB	022	29
702.5.045.1A	028a	10	713.1.192.1A	025	33	716.1.143.1A	029	18	741.1.047.1A	019	30	747.5.003.1A	021	1
702.5.051.1A	004	18	713.1.196.1A	026	17	716.1.144.1A	019	22	741.1.048.1A	019	44	747.5.003.1A	025	15
702.5.053.1A	004	14	713.1.197.3A	026	2	716.1.154.1A	027a	1	741.4.013.1B	031	7	747.5.010.1A	022	23
703.1.013.1A	021	12	713.1.210.1A	021	41	716.1.155.1A	027a	2	741.4.038.1A	018a	15	748.1.024.1A	019	3
703.5.002.2A	013	2	713.1.239.1A	028	2	716.1.401.1A	018	25	741.4.038.1A	025	7	748.1.035.1A	033	39
703.5.006.2A	008	21	713.1.266.1A	003	15	716.1.401.1A	028a	22	741.4.043.1A	023	14	748.1.035.1B	019	25
70610.8120	004	11	713.1.292.1A	014	9	716.1.407.1A	018	5	741.4.043.1A	024	16	748.1.036.1A	019	1
710.1.061.1A	006	7	713.1.292.1A	015	9	716.1.407.1A	019	7	741.4.043.1A	025	17	748.1.040.1A	002	23
710.1.109.1A	028a	4	713.1.330.1A	032	11	716.1.407.1A	029	25	741.4.043.1A	035	11	748.1.046.1A	026a	4
710.1.124.2A	004	23	713.1.364.1A	024	32	716.1.412.1A	019	43	741.4.057.1A	035	3	748.1.050.1A	010	14
710.1.125.1A	010	28	713.1.393.1A	003	13	716.1.412.1A	021	43	741.4.058.1A	035	7	748.1.065.1A	026	1
710.1.126.1A	010a	21	713.1.393.1A	004	31	716.1.414.1A	019	18	741.4.063.1A	029	12	748.1.066.2A	004	25
710.1.132.1A	028	11	713.1.409.1A	008	24	716.1.418.1A	027a	24	741.4.063.1A	035	5	748.4.002.1A	022	2
711.1.089.1A	006	6	713.1.436.1A	019	34	716.1.419.1A	030	8	741.4.130.1A	031	25	748.4.024.1AB	021	11

CATALOGUE No: 915.1.290.1B
ISSUED: 04 - 09

Index

CODE No.	Drwg.	POS. N.	CODE No.	Drwg.	POS. N.	CODE No.	Drwg.	POS. N.	CODE No.	Drwg.	POS. N.	CODE No.	Drwg.	POS. N.
748.4.037.1AB	028	3	759.1.022.2A	026	19	76835.1134	002	10	771.5.065.2BB	004	28	771.5.651.8B	020	7
749.1.002.1A	035	21	759.1.022.2A	026a	20	770.5.250.8B	010a	5	771.5.065.8B	010	2	771.5.662.8B	018	21
749.4.002.1A	021	32	764.1.001.1A	019	33	770.5.250.8B	011	6	771.5.065.8B	017	2	771.5.663.8B	016	9
749.4.004.1A	022	21	764.1.001.1A	032	10	771.1.031.1A	028	1	771.5.066.8B	011	20	771.5.663.8B	019	47
749.4.008.1A	008	7	764.1.003.1B	004	6	771.1.039.1A	020	5	771.5.066.8B	018a	9	771.5.663.8B	020	11
749.4.031.1A	019	15	764.1.011.2A	022	18	771.1.039.1A	021	28	771.5.067.0Z	002	28	771.5.665.8B	024	36
749.4.031.1A	033	24	764.1.011.2A	025	12	771.1.039.1A	026a	11	771.5.067.8B	011	3	771.5.665.8B	025	35
749.4.112.8B	019	31	764.1.022.1A	016	11	771.1.043.1A	022a	2	771.5.069.8B	005	5	771.5.667.8B	022	14
749.4.112.8B	027	3	764.1.022.1A	030	6	771.1.043.1A	025	2	771.5.069.8B	009	10	771.5.668.8B	018	8
750.1.007.1A	003	32	764.1.022.1A	034	20	771.1.044.1A	032a	7	771.5.069.8B	011	19	771.5.672.8B	018	14
750.1.012.2A	006	14	764.1.024.1A	030	22	771.1.046.1A	021	44	771.5.069.8B	012	7	771.5.721.3B	027	12
750.1.021.1A	028	12	764.1.029.1A	035	18	771.1.049.1A	008	6	771.5.071.8B	011	15	771.5.723.8B	025	32
750.1.022.1A	028	15	764.1.050.1A	022	26	771.1.049.1A	012	5	771.5.072.8B	010a	14	771.5.725.8B	019	29
750.1.048.1A	022a	10	764.1.051.1A	022	25	771.1.051.8B	011	36	771.5.078.8B	005	3	771.5.725.8B	021	7
750.1.057.1A	006	13	764.1.054.1A	033	25	771.1.052.1A	005	2	771.5.078.8B	012	12	771.5.727.8B	021	13
750.1.121.1A	012	3	764.1.064.1A	019	19	771.1.052.1A	012	6	771.5.079.8B	005	11	771.5.727.8B	021a	3
750.1.140.1A	026	13	764.1.064.1A	020	1	771.1.226.1A	029	19	771.5.080.8B	010a	15	771.5.728.8B	032	13
750.1.140.1A	026a	2	764.1.087.1A	014	8	771.1.233.1A	017	6	771.5.125.0Z	002	30	771.5.938.8B	028	9
750.1.155.1A	033	14	764.1.087.1A	015	8	771.1.369.1A	018	12	771.5.129.8B	009	8	771.5.940.8B	021	34
750.5.001.1B	018	2	764.1.090.1A	027a	18	771.1.369.1A	027	5	771.5.136.8B	010a	22	772.1.042.2A	029	6
750.5.001.1B	020	14	764.1.090.1A	029	17	771.1.373.1A	021	19	771.5.139.8B	010	10	772.1.046.1B	018	16
75191.3380	010	4	764.1.097.1A	020	30	771.1.374.1A	021	17	771.5.139.8B	010a	17	772.1.047.1B	030	15
756.2.007.1A	026a	13	764.1.105.1A	019	42	771.1.375.1A	005	8	771.5.639.8B	018	4	772.1.050.1C	018a	19
75794.1542	010a	9	76402.0002	003	17	771.5.043.8B	004	4	771.5.639.8B	019	45	772.1.050.1C	032	4
758.1.036.1A	029	8	766.1.055.2B	010	16	771.5.064.8B	011	5	771.5.639.8B	027a	29	772.1.059.1A	030	16
758.1.039.2A	017	18	766.4.019.1A	014	21	771.5.064.8B	030	12	771.5.640.8B	019	21	772.1.059.1A	031	3
758.4.017.1A	017	3	766.4.019.1A	015	21	771.5.064.8B	035	20	771.5.640.8B	032	9	772.1.060.1A	009	16

CATALOGUE No: 915.1.290.1B
ISSUED: 04 - 09

Index

CODE No.	Drwg.	POS. N.	CODE No.	Drwg.	POS. N.	CODE No.	Drwg.	POS. N.	CODE No.	Drwg.	POS. N.	CODE No.	Drwg.	POS. N.
772.1.061.1A	020	6	773.1.002.1A	021	47	775.5.021.1A	035	14	779.1.415.1A	024	3	786.1.094.1A	007	13
772.1.061.1A	030	21	773.1.005.1A	017	19	775.5.024.1A	019	27	779.1.421.1A	014	23	787.1.011.1A	016	1
772.1.062.1A	031	15	773.1.005.1A	029	9	775.5.025.1A	033	13	779.1.421.1A	015	23	788.1.054.2A	012	4
772.1.063.1A	025	19	773.5.039.3B	027a	19	775.5.025.1A	034	25	779.1.440.1B	028a	16	788.1.083.1A	019	32
772.1.077.2AB	022	7	773.5.061.8B	010a	13	777.5.049.8B	011	24	779.1.484.2B	022	24	788.1.093.1A	013	9
772.1.078.2A	028a	3	773.5.062.3B	023	10	778.5.016.1A	009	26	779.1.488.1A	026a	21	788.1.094.1A	013	8
772.1.084.2A	033	5	773.5.062.3B	024	10	778.5.016.1A	010	33	779.1.498.1A	033	21	788.1.096.2A	017	9
772.1.085.2A	017	8	773.5.062.8B	025	24	778.5.016.1A	010a	12	779.1.499.2A	033	27	788.1.097.2A	017	10
772.1.085.3B	033	6	773.5.506.8B	019	35	779.1.026.2A	011	10	779.1.501.1A	005	24	788.1.098.1A	029	4
772.1.085.3B	034	19	774.4.004.1A	020	19	779.1.039.1A	002	3	779.1.503.1A	028a	18	788.1.106.2A	005	14
772.1.087.3AB	027	2	774.4.006.1A	027a	28	779.1.082.1AB	023	5	779.1.504.1A	028	4	790.1.015.1A	019	4
772.1.088.2B	028a	24	774.4.010.1A	034	2	779.1.092.1A	023	7	779.1.509.2A	013	3	791.1.067.1A	029	16
772.1.089.3B	016	8	775.1.017.1C	017	12	779.1.092.1A	024	13	779.1.547.1A	006	4	791.2.044.1A	007	6
772.1.089.3B	019	8	775.1.019.1A	028a	13	779.1.109.2A	006	2	779.1.591.1A	021	38	799.1.024.1A	027	10
772.1.089.3B	034	1	775.1.031.1B	010	25	779.1.162.2A	009	13	779.1.605.1A	034	14	799.1.049.1A	002	1
772.1.101.1B	027a	12	775.1.031.1B	010a	20	779.1.187.1A	008	23	779.1.618.1A	034	17	799.1.051.2A	006	3
772.1.102.1A	034	12	775.1.033.1A	020	17	779.1.202.1B	030	3	779.4.005.2A	022a	4	799.1.055.1A	009	3
772.1.104.1A	033	36	775.1.045.1A	027a	23	779.1.203.3A	002	7	779.4.075.1A	011	2	799.1.158.1A	022a	6
772.1.109.1A	029	1	775.1.051.1A	032a	3	779.1.237.1B	025	8	779.5.030.2A	013	16	799.1.166.1A	022	3
772.1.109.1A	033	26	775.1.051.1B	022	6	779.1.298.1A	021	2	780.1.007.1A	019	9	799.1.175.1A	033	33
772.1.109.1A	034	23	775.1.051.1B	032	7	779.1.309.1AB	024	28	780.1.018.1A	009	2	799.1.253.1A	004	1
772.1.110.1A	017	14	775.1.054.1A	024	29	779.1.331.1D	024	25	780.1.051.1A	014	12	799.1.256.1A	025	4
772.4.046.3C	030	9	775.1.054.1A	030	7	779.1.366.1AB	023	16	780.1.051.1A	015	12	799.1.263.2A	019	13
772.4.046.3C	034	22	775.5.001.3C	020	25	779.1.366.1AB	024	23	780.1.072.1A	010a	6	799.1.482.1A	002	20
772.5.034.1A	008	30	775.5.013.1A	027a	7	779.1.366.1AB	025	22	780.5.001.1A	005	15	799.1.485.1A	014	19
772.5.038.1AB	019	17	775.5.016.1A	019	40	779.1.399.1A	026	4	780.5.001.1A	011	33	799.1.485.1A	015	19
772.5.101.8B	027a	15	775.5.021.1A	010	29	779.1.404.1A	006	9	786.1.092.2A	007	11	799.1.486.1A	014	18

CATALOGUE No: 915.1.290.1B
ISSUED: 04 - 09

CATALOGUE No: 915.1.290.1B
ISSUED: 04 - 09

CODE No.	Drwg.	POS. N.	CODE No.	Drwg.	POS. N.	CODE No.	Drwg.	POS. N.	CODE No.	Drwg.	POS. N.	CODE No.	Drwg.	POS. N.
799.1.486.1A	015	18	815.1.022.1A	016	2	827.1.433.1A	005	25	830.1.494.1B	034	24	840.1.015.1A	14/15	1
799.2.077.2A	009	14	815.1.028.1A	009	21	827.1.482.1A	033	18	830.1.527.1A	021	33	840.1.016.1A	14/15	1
799.2.159.1A	022a	7	818.2.009.1A	004	3	827.1.493.1A	020	8	830.1.530.1A	016	7	840.1.017.1A	14/15	1
799.4.009.1A	019	23	819.1.060.1A	026	11	827.1.530.1A	034	15	830.1.543.1A	027	4	840.1.018.1A	14/15	1
800.1.169.1A	031	18	819.2.063.2A	026a	6	827.1.531.1A	034	13	830.1.544.1A	018	7	840.1.019.1A	14/15	1
800.1.170.2A	030	13	821.1.001.1A	002	26	827.1.538.1A	020	31	830.1.548.1A	027a	27	840.1.020.1A	14/15	1
800.1.171.1A	031	13	821.1.051.1AB	022	4	827.1.543.1A	017	4	830.1.549.1A	018	17	840.1.021.1A	14/15	1
800.1.172.1A	031	16	821.1.051.1AB	027	7	827.1.544.1A	020	3	830.1.550.1A	018	26	840.1.022.1A	14/15	1
800.1.173.1A	031	17	821.1.070.1A	002	17	829.1.260.2A	022a	8	830.1.554.1A	032a	5	840.1.023.1A	14/15	1
800.1.174.2A	007	8	821.1.103.2A	022a	9	829.1.974.1A	020	16	830.1.555.1A	032a	4	840.1.024.1A	14/15	1
800.1.175.2A	007	9	821.1.170.1A	022	13	829.1.978.1A	023	9	830.1.556.1A	018	27	840.1.025.1A	14/15	1
800.1.176.1A	031	26	821.1.170.1A	025	9	829.1.979.1A	024	11	830.1.564.1A	033	23	840.1.026.1A	14/15	1
800.1.177.1A	031	22	821.1.222.1B	014	17	829.1.980.1A	027a	16	832.1.003.1C	028a	14	840.1.027.1A	14/15	1
8000.53724	018a	16	821.1.222.1B	015	17	829.1.981.1A	027a	6	840.1.001.1A	14/15	1	840.1.028.1A	14/15	1
8000.56443	023	13	821.1.223.1B	014	15	829.1.982.1A	020	15	840.1.002.1A	14/15	1	840.1.029.1A	14/15	1
8000.56443	024	18	821.1.223.1B	015	15	829.1.983.1A	020	23	840.1.003.1A	14/15	1	840.1.030.1A	14/15	1
808.1.118.1A	021	42	821.1.268.1A	002	13	829.1.984.1A	025	1	840.1.004.1A	14/15	1	840.1.031.1A	14/15	1
814.1.111.3B	035	12	821.1.273.1A	025	13	829.1.985.2A	018	6	840.1.005.1A	14/15	1	840.1.032.1A	14/15	1
814.1.114.1A	001d	8	821.1.309.3A	012	8	829.2.766.1A	030	10	840.1.006.1A	14/15	1	840.1.033.1A	14/15	1
814.1.179.1A	032a	2	824.1.154.1A	022	28	830.1.235.1A	011	35	840.1.007.1A	14/15	1	840.1.034.1A	14/15	1
814.1.183.1A	035	8	824.1.155.1A	022	9	830.1.411.1A	020	28	840.1.008.1A	14/15	1	840.1.041.2B	14/15	2
814.1.188.1A	015	25	824.1.156.1A	027	8	830.1.416.1A	020	2	840.1.009.1A	14/15	1	840.1.042.2B	14/15	2
814.1.236.1C	031	11	824.1.157.1A	027	9	830.1.441.1A	031	4	840.1.010.1A	14/15	1	840.1.043.2B	14/15	2
814.1.311.1A	029	13	825.1.036.2A	026a	17	830.1.465.1A	035	16	840.1.011.1A	14/15	1	840.1.044.2B	14/15	2
814.1.326.1A	031	14	826.1.012.1A	010	18	830.1.477.1A	024	37	840.1.012.1A	14/15	1	840.1.045.2B	14/15	2
814.1.327.1A	031	27	826.1.030.1A	002	33	830.1.479.1A	024	27	840.1.013.1A	14/15	1	840.1.046.2B	14/15	2
814.4.010.1A	032a	10	827.1.157.1A	035	17	830.1.494.1B	008	28	840.1.014.1A	14/15	1	840.1.047.2B	14/15	2

CATALOGUE No: 915.1.290.1B
ISSUED: 04 - 09

Index

CODE No.	Drwg.	POS. N.	CODE No.	Drwg.	POS. N.	CODE No.	Drwg.	POS. N.	CODE No.	Drwg.	POS. N.	CODE No.	Drwg.	POS. N.
840.1.048.2B	14/15	2	840.1.075.2B	14/15	2	850.4.038.1A	019	46	852.1.104.1K	006	11	852.1.176.1A	031	29
840.1.049.2B	14/15	2	840.1.076.2B	14/15	2	850.4.038.1A	030	18	852.1.104.1L	006	11	852.1.186.1A	019	16
840.1.050.2B	14/15	2	840.1.077.2B	14/15	2	850.4.038.1A	033	11	852.1.104.1M	006	11	852.1.195.1A	005	10
840.1.051.2B	14/15	2	840.1.078.2B	14/15	2	850.4.043.1A	017	5	852.1.104.1N	006	11	852.1.195.1A	009	7
840.1.052.2B	14/15	2	840.1.079.2B	14/15	2	850.4.047.1A	020	18	852.1.104.2A	006	11	852.1.216.1A	028a	2
840.1.053.2B	14/15	2	840.1.080.2B	14/15	2	850.4.047.1A	027a	17	852.1.104.2B	006	11	852.1.217.1A	026a	15
840.1.054.2B	14/15	2	840.1.081.2B	14/15	2	850.4.047.1A	033	4	852.1.104.2C	006	11	852.1.221.1A	026	14
840.1.055.2B	14/15	2	840.1.082.2B	14/15	2	850.4.047.1A	034	18	852.1.104.2D	006	11	852.1.221.1A	026a	3
840.1.056.2B	14/15	2	840.1.083.2B	14/15	2	850.4.052.1A	027a	10	852.1.104.2E	006	11	852.1.222.1A	026	6
840.1.057.2B	14/15	2	840.1.084.2B	14/15	2	850.4.055.1A	018	1	852.1.104.2F	006	11	852.1.232.1A	027	16
840.1.058.2B	14/15	2	840.1.085.2B	14/15	2	850.4.055.1A	019	5	852.1.104.2G	006	11	852.1.250.1A	023	23
840.1.059.2B	14/15	2	840.1.086.2B	14/15	2	850.4.055.1A	033	28	852.1.104.2I	006	11	852.1.250.1A	024	33
840.1.060.2B	14/15	2	840.1.087.2B	14/15	2	850.4.067.1A	018a	14	852.1.104.2J	006	11	852.4.013.1A	017	16
840.1.061.2B	14/15	2	840.2.001.1A	014	1	851.1.001.1B	004	9	852.1.114.1A	011	34	852.4.021.1A	029	10
840.1.062.2B	14/15	2	840.2.001.1A	015	1	851.1.004.1A	003	31	852.1.119.1A	034	11	852.4.173.1A	027a	25
840.1.063.2B	14/15	2	840.2.002.2B	014	2	851.1.010.1A	006	12	852.1.135.1A	005	19	852.5.009.1A	018	9
840.1.064.2B	14/15	2	840.2.002.2B	015	2	851.1.013.1A	008	14	852.1.144.1A	028a	23	852.5.023.1A	010a	16
840.1.065.2B	14/15	2	841.1.037.1A	033	34	851.4.002.1A	004	5	852.1.151.1A	022	15	852.5.023.1A	011	30
840.1.066.2B	14/15	2	841.1.050.1A	028a	19	851.4.006.1A	021	22	852.1.151.1A	025	3	852.5.023.1A	015	20
840.1.067.2B	14/15	2	841.1.051.1B	004	2	852.1.005.1A	002	14	852.1.160.1B	018	11	852.5.023.1A	035	13
840.1.068.2B	14/15	2	847.4.002.1A	027	11	852.1.049.1B	021	35	852.1.172.1A	009	11	852.5.024.1A	002	5
840.1.069.2B	14/15	2	848.2.002.1A	021	4	852.1.053.2A	002	2	852.1.172.1A	011	7	852.5.024.1A	005	16
840.1.070.2B	14/15	2	848.4.026.1A	028	13	852.1.072.1A	019	6	852.1.174.1A	008	8	852.5.024.1A	011	32
840.1.071.2B	14/15	2	848.4.027.1A	028	16	852.1.075.1B	034	4	852.1.174.1A	009	9	852.5.024.1A	019	10
840.1.072.2B	14/15	2	848.5.001.1A	022	16	852.1.094.1A	002	19	852.1.176.1A	016	13	852.5.024.1A	023	17
840.1.073.2B	14/15	2	848.5.002.1A	022	22	852.1.099.1A	032	12	852.1.176.1A	018a	10	852.5.024.1A	024	4
840.1.074.2B	14/15	2	850.1.209.1A	034	5	852.1.104.1H	006	11	852.1.176.1A	020	4	852.5.024.1A	025	23

CATALOGUE No: 915.1.290.1B
ISSUED: 04 - 09

CODE No.	Drwg.	POS. N.	CODE No.	Drwg.	POS. N.	CODE No.	Drwg.	POS. N.	CODE No.	Drwg.	POS. N.	CODE No.	Drwg.	POS. N.
852.5.026.1A	011	25	866.1.108.2A	033	35	884.4.025.1A	033	32	886.5.013.1A	010	3	88713.2060	001a	11
852.5.026.1B	014	11	866.1.116.1A	021	45	884.4.051.1A	026a	18	886.5.013.1A	010a	18	88713.2092	001	6
852.5.026.1B	015	11	866.1.118.1A	033	3	884.5.003.1A	022	10	886.5.014.1A	021	40	88713.2102	001a	4
852.5.027.1A	030	20	866.4.006.1A	032	18	884.5.003.1A	027	14	886.5.048.1A	032a	6	88713.2103	001	7
852.5.040.1A	021	36	872.1.053.1A	018a	8	884.5.011.1A	011	8	886.5.051.1A	013	1	88713.2133	001	12
852.5.042.1A	010	5	872.1.054.2A	028a	7	884.5.013.1A	005	18	88700.5665	001	10	88713.2409	001b	15
853.1.003.1A	010	30	872.1.058.1A	021	21	884.5.034.1A	002	22	88700.5749	001	14	88713.2442	001	2
853.1.003.1A	012	2	872.4.060.1A	031	20	884.5.039.1A	009	25	88713.0123	001	4	88713.2562	001b	13
853.5.010.1A	018	20	873.1.005.1A	013	13	886.1.013.1A	032a	1	88713.0869	001	15	88713.2669	001	17
855.4.001.1A	033	38	875.1.065.1A	001d	3	886.1.024.1A	010	27	88713.0870	001	16	88713.2676	001	1
856.1.001.1A	003	6	875.1.128.1A	028	14	886.1.095.1A	011	22	88713.1010	001a	2	88713.2827	001	11
856.1.031.1A	003	16	875.1.146.1A	010	24	886.4.033.1A	009	4	88713.1058	001b	7	88713.2832	001a	1
856.1.042.1A	034	26	875.1.146.1A	010a	19	886.4.033.1A	010	32	88713.1062	001b	9	88713.2834	001a	17
856.1.062.2A	008	19	876.1.102.2B	029	2	886.4.034.1A	009	18	88713.1068	001b	2	88713.2854	001b	8
856.1.064.2A	010	15	877.1.138.1A	023	15	886.4.037.1A	009	6	88713.1071	001b	10	88713.2855	001b	3
856.1.071.1A	012	9	877.1.138.1A	024	17	886.4.043.1A	004	27	88713.1072	001b	1	88713.2856	001b	17
856.1.074.2A	013	4	877.1.139.1A	025	21	886.4.064.1A	027a	11	88713.1074	001b	4	88713.2857	001b	12
856.1.075.1A	012	17	877.2.006.1B	029	11	886.4.089.1A	017	17	88713.1515	001b	6	88713.2858	001b	14
860.1.004.1A	010	23	881.1.012.1A	002	32	886.4.103.1A	031	10	88713.1749	001a	13	88713.2861	001a	15
860.1.004.1A	011	21	881.1.023.1A	030	19	886.4.116.1A	022	27	88713.1805	001a	3	88713.2870	001a	10
860.1.005.1A	010	26	881.1.034.1A	012	18	886.4.116.1A	025	11	88713.1806	001a	6	88713.2874	001	8
860.5.006.1A	014	24	881.1.054.1A	026a	7	886.4.118.1A	004	26	88713.1821	001a	9	88713.2877	001a	18
860.5.006.1A	015	24	881.1.058.1A	016	12	886.4.118.1A	010	13	88713.1832	001	9	88713.2878	001	5
860.5.017.1A	021	27	881.1.058.1A	019	41	886.4.124.1A	026a	16	88713.1886	001	13	88713.2906	001	18
866.1.098.1A	018	24	881.2.001.1A	004	19	886.4.132.1A	005	12	88713.1920	001a	8	88713.2951	001b	11
866.1.104.1A	033	2	882.1.003.1A	008	11	886.4.132.1A	009	22	88713.1980	001a	16	88713.3211	001b	5
866.1.107.1A	033	8	882.1.006.1A	002	16	886.4.132.1A	010	8	88713.2011	001a	7	88713.3220	001b	16

CATALOGUE No: 915.1.290.1B
ISSUED: 04 - 09

Index

CODE No.	Drwg.	POS. N.	CODE No.	Drwg.	POS. N.	CODE No.	Drwg.	POS. N.	CODE No.	Drwg.	POS. N.	CODE No.	Drwg.	POS. N.
88765.1126C	001d	24	930.4.123.1A	010a	8	97900.0227	001d	7						
88765.1126T	001d	16	930.5.005.1A	011	26	97900.0228	001d	12						
88765.1126V	001c	14	930.5.006.2B	011	28	97900.0229	001c	13						
88765.1188	001a	12	930.5.007.1A	013	17	97900.0230	001d	20						
88765.1298	001	3	930.5.012.1A	028a	5	97900.0231	001d	17						
88765.1371	001c	3	934.1.006.1A	031	8	97900.0232	001c	7						
88765.1374	001c	4	934.1.010.1A	029	14									
88765.1518	001a	5	934.1.012.1A	031	28									
88765.1524	001a	14	93783.1524	011	18									
893.1.007.1A	031	2	93823.2018	004	30									
893.2.006.2A	010	7	93823.3075	005	17									
893.2.013.1A	005	7	94247.0014	010a	3									
893.4.005.1A	025	27	94247.0014	011	12									
893.4.007.1A	024	14	97900.0002	001c	2									
893.4.008.1A	023	11	97900.0003	001d	23									
894.1.020.1A	009	23	97900.0215	001c	1									
895.2.020.1A	032	8	97900.0216	001c	5									
8A00.67610	031	12	97900.0217	001c	15									
913.7.141.1G	033	29	97900.0218	001d	18									
930.1.004.1A	021	5	97900.0219	001c	10									
930.4.002.2A	003	30	97900.0220	001d	21									
930.4.011.1A	028	6	97900.0221	001d	22									
930.4.021.1A	005	20	97900.0222	001c	9									
930.4.022.1A	010	20	97900.0223	001c	11									
930.4.034.1A	005	6	97900.0224	001c	6									
930.4.035.1A	004	16	97900.0225	001c	8									
930.4.052.1A	026	18	97900.0226	001c	12									

CATALOGUE No: 915.1.290.1B
ISSUED: 04 - 09